AUTOMATISME I CONTROL ELÈCTRIC
C/ Samontà, 22
Pol. Ind. Fontsanta
08970 Sant Joan Despí
BARCELONA
T. +34 93 477 62 62
www.acesa.es

More Performance. Simplified.

u-remote.

Weidmüller u-remote – our innovative remote-I/O concept with IP 20 which focuses purely on user benefits: tailored planning, faster installation, safer start-up, minimised downtimes. For considerably improved performance and greater productivity.

IP 20

IP 20	u-remote	A.2
	Introduction to housing	A.6
	Field bus coupler	A.8
	Digital input modules	A.16
	Digital output modules	A.24
	Digital counter modules	A.34
	Pulse width modulation modules	A.39
	Analogue input modules	A.42
	Temperature modules	A.46
	Analogue output modules	A.50
	Power-feed modules	A.52
	Modules for functional safety	A.56
	Accessories	A.60
	System overview	A.64

AUTOMATISME I CONTROL ELÈCTRIC
C/ Samontà, 22
Pol. Ind. Fontsanta
08970 Sant Joan Despí
BARCELONA
T. +34 93 477 62 62
www.acesa.es

More Performance. Simplified.

u-remote.

Weidmüller u-remote – the innovative remote-I/O concept with IP 20 which focuses purely on user benefits: tailored planning, faster installation, safer start-up, minimised downtimes. For considerably improved performance and greater productivity. Reduce the size of your cabinets with u-remote, thanks to the narrow design and the need for fewer power-feed modules. Our u-remote technology also offers tool-free assembly, while the modular design and integrated web server speed up installation, both in the cabinet and machine. Status LEDs on the channel and each u-remote module enable reliable diagnosis and rapid service.

This and many other amazing ideas boost the availability of your machines and systems. And ensure smooth processes too. From planning to operation.

Our u-remote can do it all - More Performance. Simplified.

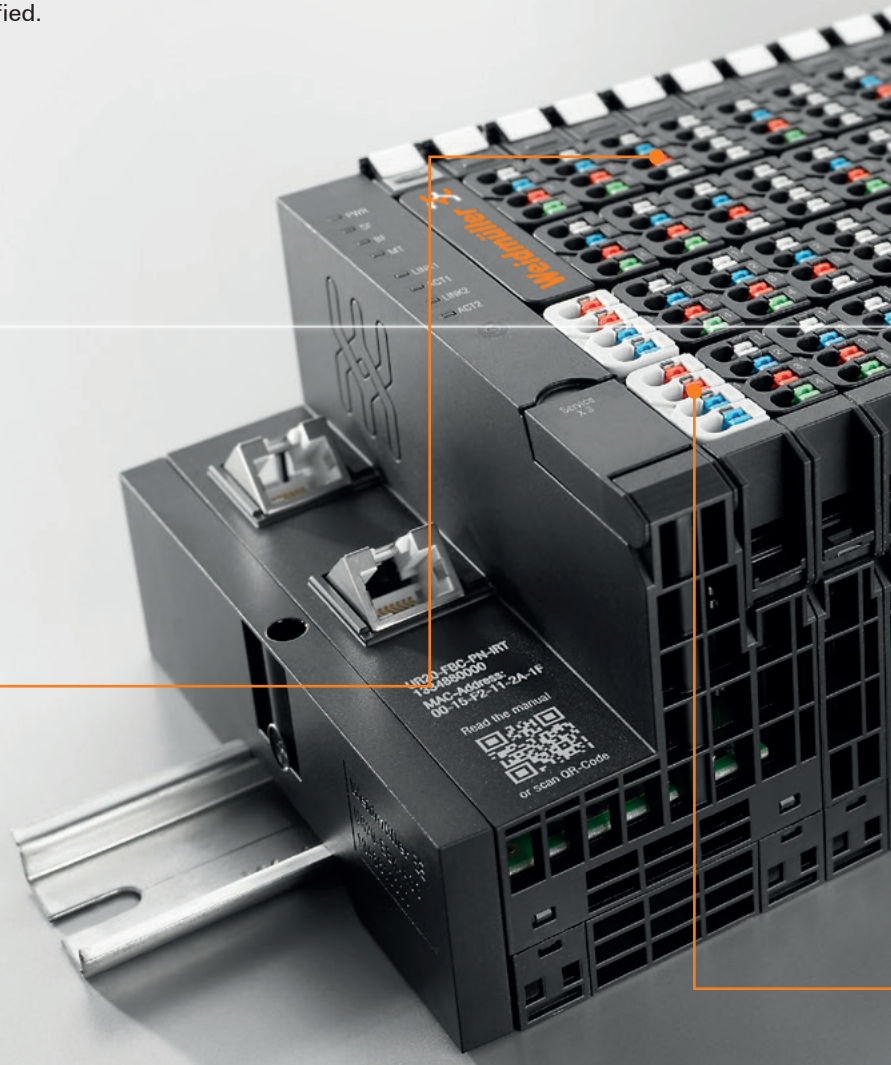

Speed things up with modularity
The modular structure of u-remote ensures rapid start-up and simple service. The compact design enables intuitive handling which reduces wiring mistakes and therefore lessens the start-up times for machines and systems. u-remote speeds up the replacement of electronics without the need to alter wiring during maintenance work, so improving system availability.

Improve system availability
The system simply runs on and on. The permanent base allows electronics to be replaced without interrupting communication, or the supply of voltage to your remote-I/O system. A reliable solution for minimising machine downtime.

Local and remote testing
By starting up one section at a time, u-remote simplifies remote testing and its integrated web server capability speeds up maintenance work. It allows you to run diagnoses remotely using any standard browser and without having to install any software. You can also simulate inputs and force outputs, locally and with ease.

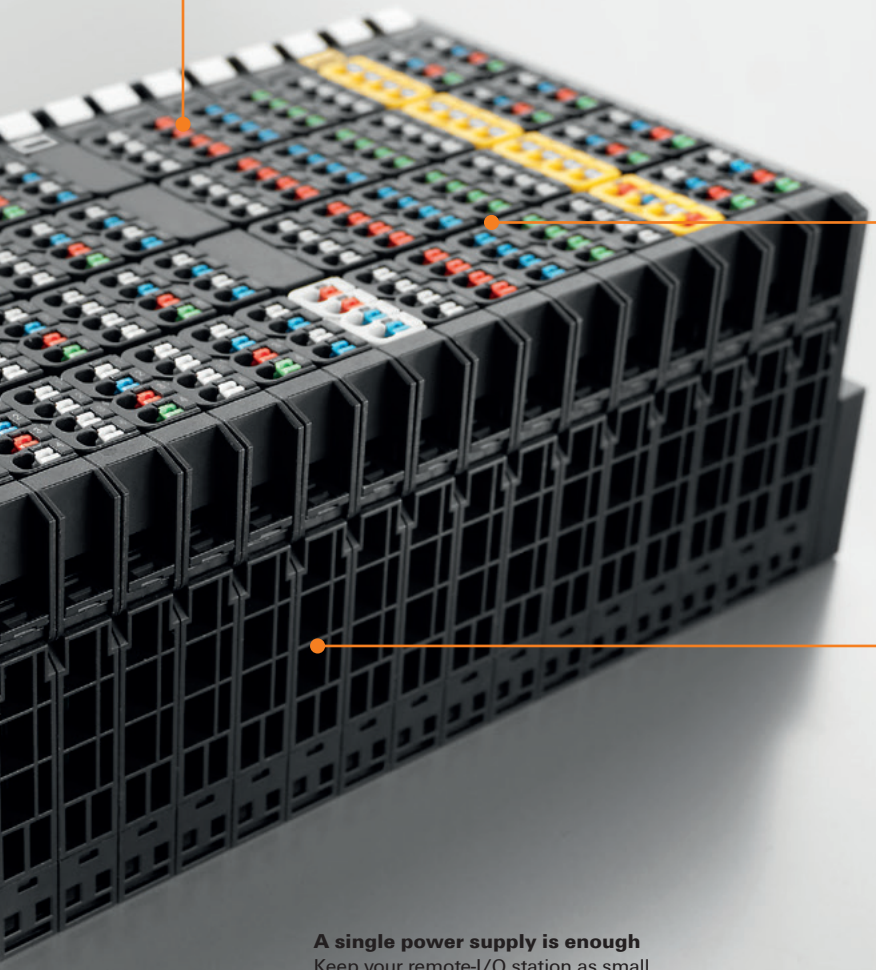

Plan for a smaller set-up
Now you can configue your cabinets one size smaller. With the narrow design (module width of 11.5 mm), not only does u-remote save space, it also delivers highest channel density and extremely flexible design options. For innovative and cost-saving solutions in small spaces.

Intelligently separated
u-remote separates the supply for inputs and outputs using two 10 A current paths which are able to withstand high loads. High productivity translates into fewer power-feed modules and therefore more space and less planning. And your system can be quickly maintained while retaining full diagnostic capability, as inputs and outputs can be switched off independently of one another.

A single power supply is enough
Keep your remote-I/O station as small as possible and simplify your planning. u-remote has a 4 A supply path, which allows 64 I/O-modules to be operated with just one power supply on the coupler.

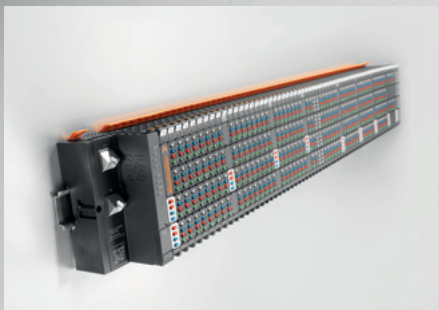

More Performance. Simplified.
u-remote.

One glance and you can see everything going on
Clear assignment of status and diagnosis has never been this simple. With one LED on the channel and status displays on each module, you can easily see all you need on u-remote. The technician can see and rectify errors without delay. Indispensable benefits for a safe start-up and rapid system maintenance.

Extremely fast with huge power reserves
The u-remote has outstanding electronic performance, with the high-speed system bus achieving up to 256 DI/DOs in 20 µs. u-remote offers an extremely fast response time and precise mapping of processes in the system, with up to 1024 I/O-channels per station, as well as huge power reserves for future use.

Keeping it simple
The u-remote modules can be released without any tools and their sequence can be changed. For faster machine maintenance and simple system modification.

One row with no mistakes
The clearly structured single-row connection strip assists with assignment to the circuit diagrams. When working to tight deadlines, this prevents wiring mistakes and problems during service work.

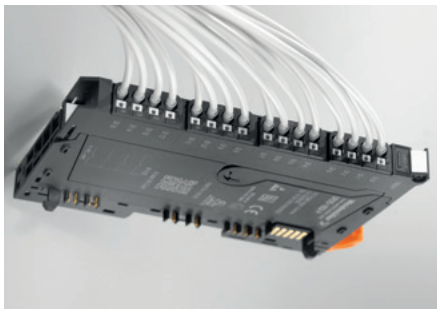

Direct insertion – direct savings
u-remote is equipped with "PUSH IN" direct connection technology. The conductor with wire end ferrule is simply inserted in the clamping unit until the stop is reached – job done! This technology delivers time savings of up to 50 percent, compared to conventional wire-connection methods, and without security losses on safety.

Simply plug and go
The plug-in connection level allows sensors and actuators to be connected with pre-assembled cables. This means improved time benefits, better handling, and minimises the number of mistakes in system wiring.

Focus on reliability
u-remote remains stable in the event of fluctuating temperatures. It is designed for use in temperatures of between –20 °C and +60 °C without restrictions on function, which is not only great for safety, but the system's life expectancy too.

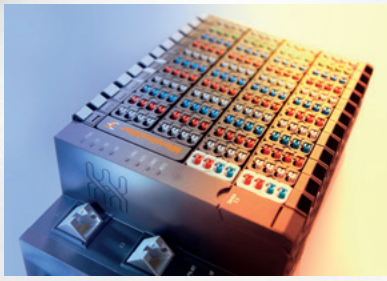

More Performance. Simplified.

u-remote.

Let's connect.

IP 20

u-remote from Weidmüller is the reliable interface between field bus and field level in automation. The modular system is based on various components: a field bus coupler, up to 64 I/O-modules, optional power-feed modules and a wealth of accessories, such as markers and terminating elements.

The field bus coupler is the central link between the various field-bus standards and the u-remote system bus. At the same time, up to 64 I/O-modules are supplied via its integrated power contacts. The well-engineered technology of the connection system enables 2 x 10 A to be supplied for the input and output modules and the system voltage to be fully supplied through the field bus coupler.
Every field bus coupler provides direct access to the u-remote system via a web server without additional software having to be installed. The system can thereby be parameterised and its configuration checked. Inputs and outputs can also be checked or influenced. The connection may take the form of an Ethernet-based field bus or micro USB.
The u-remote field bus couplers are integrated in the standard simple manner. The corresponding development environments of the control systems and the device description files available online, e.g. GSD, ESD or XML, can be used to easily perform the necessary settings.

The modularly structured I/O-modules are unique in that they allow the sensor and actuator wiring to be designed in both a robust and plug-in manner. This allows the electronics to be replaced at any time even with permanent wiring without downstream I/O-module operations being affected. This achieves an invaluable time saving, in terms of both wiring inaccessible cabinets and rapidly replacing sensors. Thanks to the “PUSH IN” technology for up to 1.5 mm^2, in their narrowest form of 11.5 mm, the modularly structured u-remote I/O-modules can be used for all sensor and actuator connections with a very high connection density. A clear status and diagnosis display on the connection also ensures rapid and precise checks for individual sensors and actuators.

PROFIBUS field bus coupler

DP-V1; Web server tool; Sub-D connection

In automation technology, the PROFIBUS-DP standard enables the controlled incorporation of sensors and actuators via one central control unit. The UR20-FBC-PB-DP field bus coupler is a PROFIBUS-DP-V1 participant certified by the Profibus user organisation. With options for connecting up to 64 u-remote participants, it serves as the head module for the u-remote system bus. The PROFIBUS-DP coupler has a Sub-D plug-in connector and supports all services according to the DP-V1 specification. Two rotary coding switches are used to address individual PROFIBUS participants.

The coupler can be activated with a system-independent web server application via the USB service interface. All information, such as diagnoses, status values and parameters, can therefore be read out. All connected inputs can also be simulated or outputs set. The initial system power supply is already integrated in the field bus coupler. Power is supplied via two 4-pin connectors, separated into the input and output current paths.

Since the PROFIBUS-DP products from Weidmüller make full use of all the latest technological possibilities, such as GSD files and diagnosis messages, they actively support your application in the most important tasks – from engineering and commissioning to faults.

More Performance. Simplified.

Block diagram UR20-FBC-PB-DP

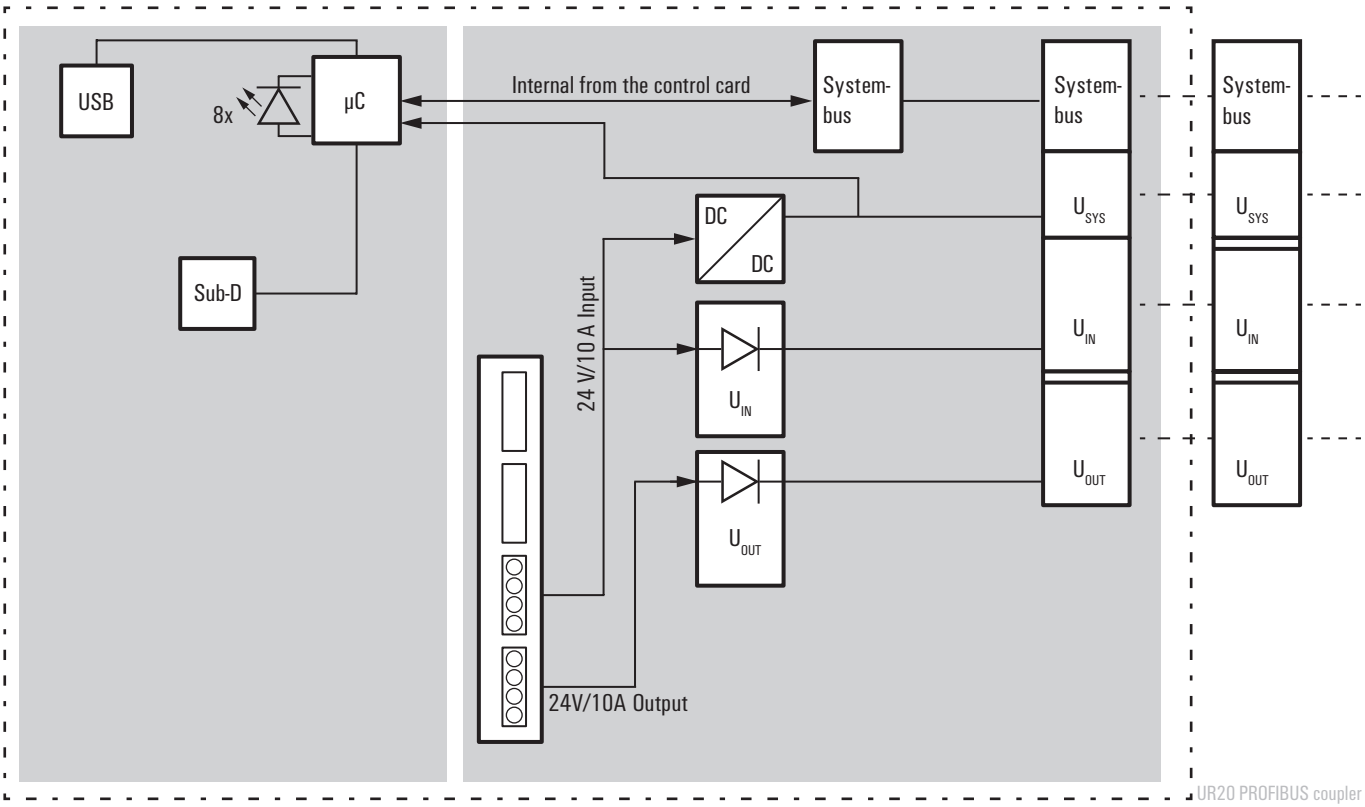

PROFIBUS

- 2 x 10 A current paths
- Address can be set using rotary switch
- Web server
- System supply of 64 I/O-modules
- Temperature range -20... +60 °C
- PROFIBUS DP-V1 up to 12 MBaud

UR20-FBC-PB-DP

Technical data

System data	
Connection	9-pin SUB-D connector
Field bus protocol	PROFIBUS DP-V1
Process data	488 Byte
Parameter data	244 Byte
Diagnostic data	244 Byte
Max. number of I/O-modules	64
Configuration interface	USB 2.0
Transmission rate of field bus	12 Mbit/s
Transmission speed of u-remote system bus	48 Mbit/s
Supply	
Supply voltage for system and inputs	24 V DC +20 % / -15 %
Supply voltage for outputs	24 V DC +20 % / -15 %
Feed current for input modules, max.	10 A
Feed current for output modules, max.	10 A
Current consumption (I_{IN} in power segment of field bus coupler), typ.	100 mA
General data	
Weight	220 g
Dimensions (H/W/D)	120 mm (with catch lever 128 mm) x 52 mm x 76 mm
Download of GSD-file on www.weidmueller.com	

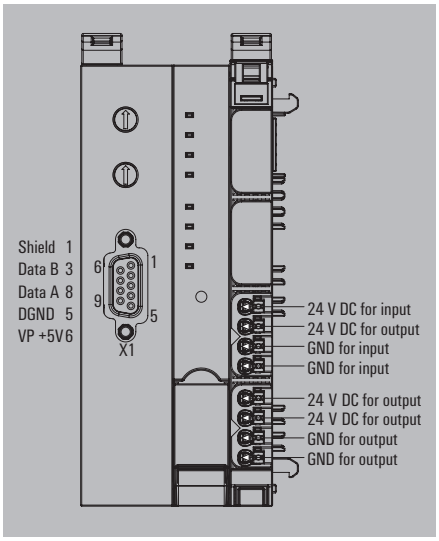

Ordering data

Module variants	Type	Qty.	Order No.
Field bus coupler, PROFIBUS DP-V1	UR20-FBC-PB-DP	1	1334870000

Accessories

	Type	Qty.	Order No.
Coding elements	KOSM BHZ5.00	100	1483050000
Termination kit	UR20-EBK-ACC	5	1346610000
Swivel marker	UR20-SM-ACC	20	1339920000
Connection marker for pusher custom printing	PM 2.7/2.6 MC SDRVPE	192	1323700000
Connection marker for pusher neutral	PM 2.7/2.6 MC NE WS	960	1323710000
Module marker for custom printing	DEK 5/8-11.5 MC SDR	100	1341610000
Module marker for neutral	DEK 5/8-11.5 MC NE WS	500	1341630000
Thermotransfer version (Material: Polyester)	THM UR20 GE *1)	1	1429910000
Thermotransfer version (Material: Polyester)	THM UR20 WS *1)	1	1429420000
Paper version for Laserprinter	ESO UR20 DIN A4 WS *2)	10	1429430000
Replacement parts			
Plug-in connector unit	UR20-PK-FBC-SP	5	1346580000
Note	*1) 1 roll = 1000 label = 1 Qty. *2) 1 sheet = 60 label = 1 Qty.		

Product standard	IEC 61131-2
EMC	EN 61000
ATEX	EN 60079
UL (in preparation)	UL 508

Let's connect.

PROFINET field bus coupler

Web server tool; two RJ45 ports; 100 Mbit/s

PROFINET is gaining in importance as a rapidly growing Industrial Ethernet Standard. By supporting real-time functionality (RT) and isochronous real-time functionality (IRT), the technology complies with modern system and application requirements to a large extent. The UR20-FBC-PN-IRT field bus coupler is a PROFINET-IRT participant certified by the PROFIBUS user organisation. It is able to connect up to 64 u-remote participants and two Ethernet ports with integrated switch to implement a line network structure.

The coupler can be activated with a system-independent web server application via the USB service interface or the Ethernet ports. All information, such as diagnoses, status values and parameters, can therefore be read out. All connected inputs can also be simulated or outputs set. The initial system power supply is already integrated in the field bus coupler. Power is supplied via two 4-pin connectors, separated into the input and output current paths.

Since the PROFIBUS products from Weidmüller make full use of all the latest technological possibilities, such as GSD files and diagnosis messages, they actively support your application in the most important tasks – from engineering and commissioning to faults.

More Performance. Simplified.

Block diagram UR20-FBC-PN-IRT

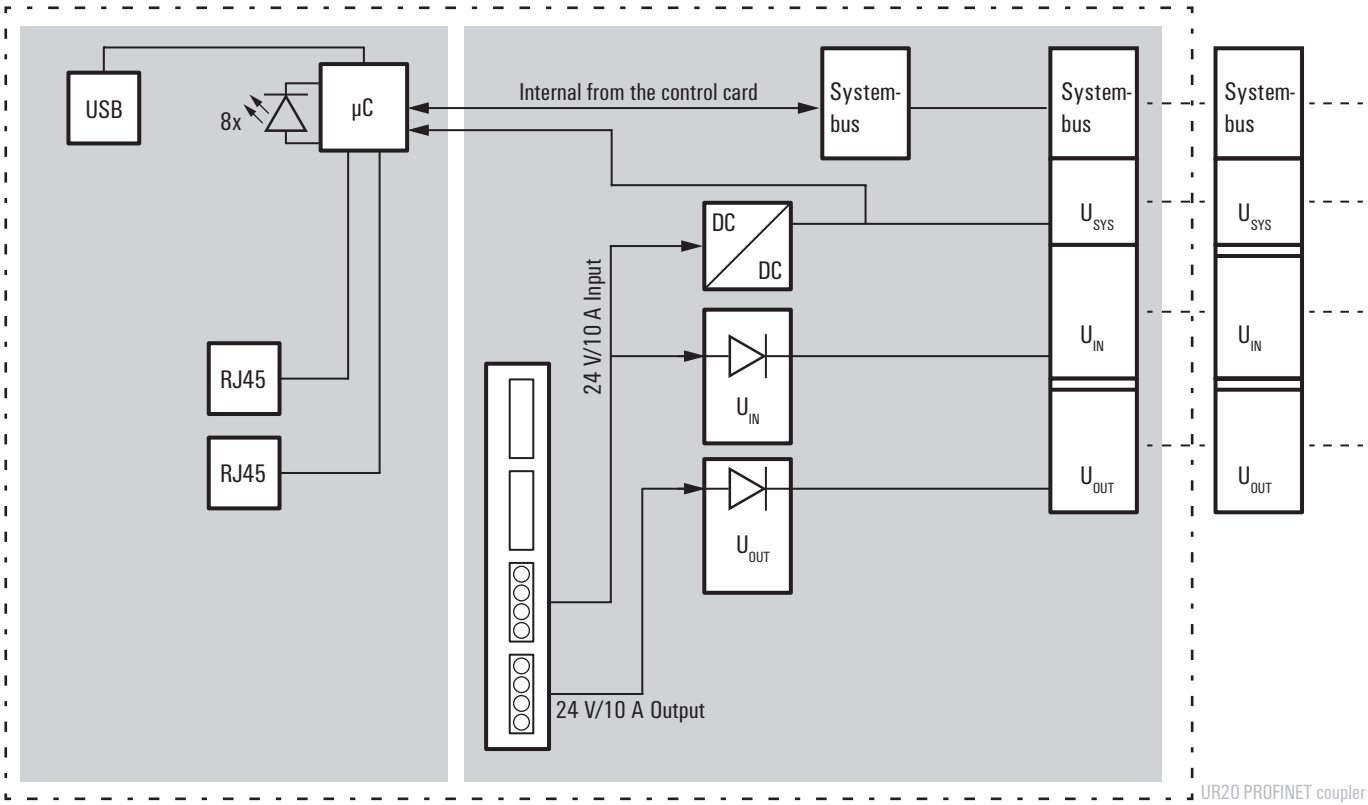

PROFINET

- 2 x 10 A current paths
- Web server
- System supply of 64 I/O-modules
- Temperature range -20... +60 °C
- PROFINET IRT/RT capable
- PROFINET diagnosis
- LLDP – Neighborhood detection

UR20-FBC-PN-IRT

Technical data

System data	
Connection	2 x RJ-45
Field bus protocol	PROFINET IRT
Process data	1024 Byte
Parameter data	1485 Byte
Diagnostic data	1485 Byte
Fast startup	yes
Max. number of I/O-modules	64
Configuration interface	USB 2.0
Transmission rate of field bus	100 Mbit/s
Transmission speed of u-remote system bus	48 Mbit/s
Supply	
Supply voltage for system and inputs	24 V DC +20 % / -15 %
Supply voltage for outputs	24 V DC +20 % / -15 %
Feed current for input modules, max.	10 A
Feed current for output modules, max.	10 A
Current consumption (I_{IN} in power segment of field bus coupler), typ.	116 mA
General data	
Weight	220 g
Dimensions (H/W/D)	120 mm (with catch lever 128 mm) x 52 mm x 76 mm
Download of GSD-file on www.weidmueller.com	

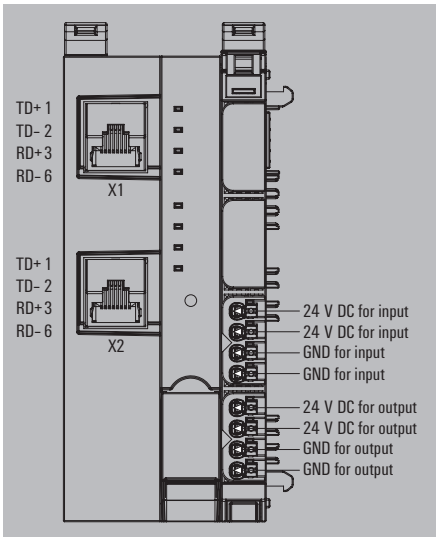

Ordering data

Module variants	Type	Qty.	Order No.
Field bus coupler, PROFINET IRT	UR20-FBC-PN-IRT	1	1334880000

Accessories

	Type	Qty.	Order No.
Coding elements	KOSM BHZ5.00	100	1483050000
Termination kit	UR20-EBK-ACC	5	1346610000
Swivel marker	UR20-SM-ACC	20	1339920000
Connection marker for pusher custom printing	PM 2.7/2.6 MC SDR	192	1323700000
Connection marker for pusher neutral	PM 2.7/2.6 MC NE WS	960	1323710000
Module marker for custom printing	DEK 5/8-11.5 MC SDR	100	1341610000
Module marker for neutral	DEK 5/8-11.5 MC NE WS	500	1341630000
Thermotransfer version (Material: Polyester)	THM UR20 GE *1)	1	1429910000
Thermotransfer version (Material: Polyester)	THM UR20 WS *1)	1	1429420000
Paper version for Laserprinter	ESO UR20 DIN A4 WS *2)	10	1429430000
Replacement parts			
Plug-in connector unit	UR20-PK-FBC-SP	5	1346580000
Note	*1) 1 roll = 1000 label = 1 Qty. *2) 1 sheet = 60 label = 1 Qty.		

Product standard	IEC 61131-2
EMC	EN 61000
ATEX	EN 60079
UL (in preparation)	UL 508

Let's connect.

EtherCAT field bus coupler

Web server tool; two RJ45 ports; 10/100 Mbit/s

EtherCAT is a popular field bus standard for systems with stringent time requirements. The UR20-FBC-EC field bus coupler is an EtherCAT participant certified by the EtherCAT Technology Group. With options for connecting up to 64 u-remote participants, it serves as the head module for the u-remote system bus. The EtherCAT coupler has two Ethernet ports with integrated switch for implementing a line network structure.

The coupler can be activated with a system-independent web server application via the USB service interface or the Ethernet ports. All information, such as diagnoses, status values and parameters, can therefore be read out. All connected inputs can also be simulated or outputs set. The system's initial power supply is already integrated in the field bus coupler. Power is supplied via two 4-pin connectors, separated into the input and output current paths.

Since the EtherCAT products from Weidmüller make full use of all the latest technological possibilities, such as use of XML files, they actively support your application in the most important tasks – from engineering and commissioning to faults.

More Performance. Simplified.

Block diagram UR20-FBC-EC

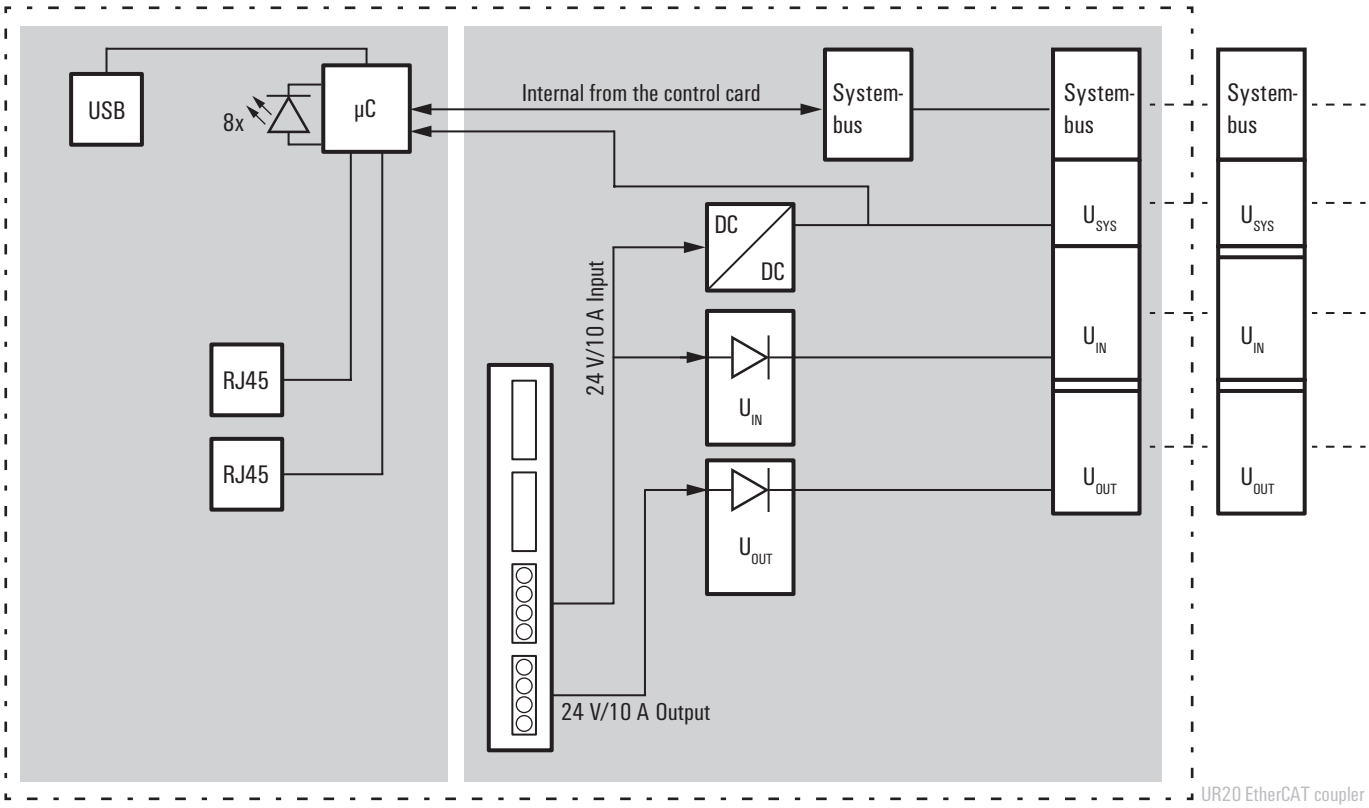

EtherCAT

- 2 x 10 A current paths
- Web server
- System supply of 64 I/O-modules
- Temperature range -20... +60 °C
- Various EtherCAT services

UR20-FBC-EC

Technical data

System data	
Connection	2 x RJ-45
Field bus protocol	EtherCAT
Process data	8 kByte
Parameter data	1.024 Byte
Diagnostic data	1.024 Byte
Max. number of modules	64
Configuration interface	USB 2.0
Transmission rate of field bus	100 Mbit/s
Transmission speed of u-remote system bus	48 Mbit/s
Supply	
Supply voltage for system and inputs	24 V DC +20 % / -15 %
Supply voltage for outputs	24 V DC +20 % / -15 %
Feed current for input modules, max.	10 A
Feed current for output modules, max.	10 A
Current consumption (I_{IN} in power segment of field bus coupler), typ.	130 mA
General data	
Weight	220 g
Dimensions (H/W/D)	120 mm (with catch lever 128 mm) x 52 mm x 76 mm
Download of GSD-file on www.weidmueller.com	

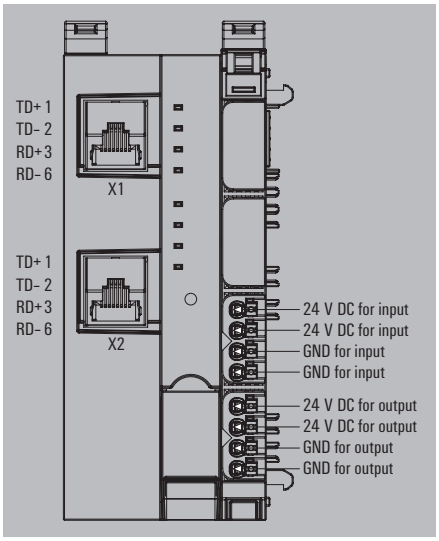

Ordering data

Module variants	Type	Qty.	Order No.
Field bus coupler, EtherCAT	UR20-FBC-EC	1	1334910000

Accessories

	Type	Qty.	Order No.
Coding elements	KOSM BHZ5.00	100	1483050000
Termination kit	UR20-EBK-ACC	5	1346610000
Swivel marker	UR20-SM-ACC	20	1339920000
Connection marker for pusher custom printing	PM 2.7/2.6 MC SDR	192	1323700000
Connection marker for pusher neutral	PM 2.7/2.6 MC NE WS	960	1323710000
Module marker for custom printing	DEK 5/8-11.5 MC SDR	100	1341610000
Module marker for neutral	DEK 5/8-11.5 MC NE WS	500	1341630000
Thermotransfer version (Material: Polyester)	THM UR20 GE *1)	1	1429910000
Thermotransfer version (Material: Polyester)	THM UR20 WS *1)	1	1429420000
Paper version for Laserprinter	ESO UR20 DIN A4 WS *2)	10	1429430000
Replacement parts			
Plug-in connector unit	UR20-PK-FBC-SP	5	1346580000
Note	*1) 1 roll = 1000 label = 1 Qty. *2) 1 sheet = 60 label = 1 Qty.		

Product standard	IEC 61131-2
EMC	EN 61000
ATEX	EN 60079
UL (in preparation)	UL 508

Let's connect.

Modbus-TCP field bus coupler

Web server tool; two RJ45 ports; 10/100 Mbit/s

System safety around the globe is provided by the Modbus-TCP version, which is stated in IEC 61158 as an Industrial Ethernet Standard. The UR20-FBC-MOD-TCP from Weidmüller is a field bus coupler designed in accordance with IEC 61158. With options for connecting up to 64 u-remote participants, it serves as the head module for the u-remote system bus.

The coupler can be activated with a system-independent web server application via the USB service interface or the Ethernet ports. All information, such as diagnoses, status values and parameters, can therefore be read out. All connected inputs can also be simulated or outputs set. The system's initial power supply is already integrated in the field bus coupler. Power is supplied via two 4-pin connectors, separated into the input and output current paths.

Since the Modbus-TCP products from Weidmüller make full use of all the latest technological possibilities, such as diagnosis options, they actively support your application in the most important tasks – from engineering and commissioning to faults.

More Performance. Simplified.

Block diagram UR20-FBC-MOD-TCP

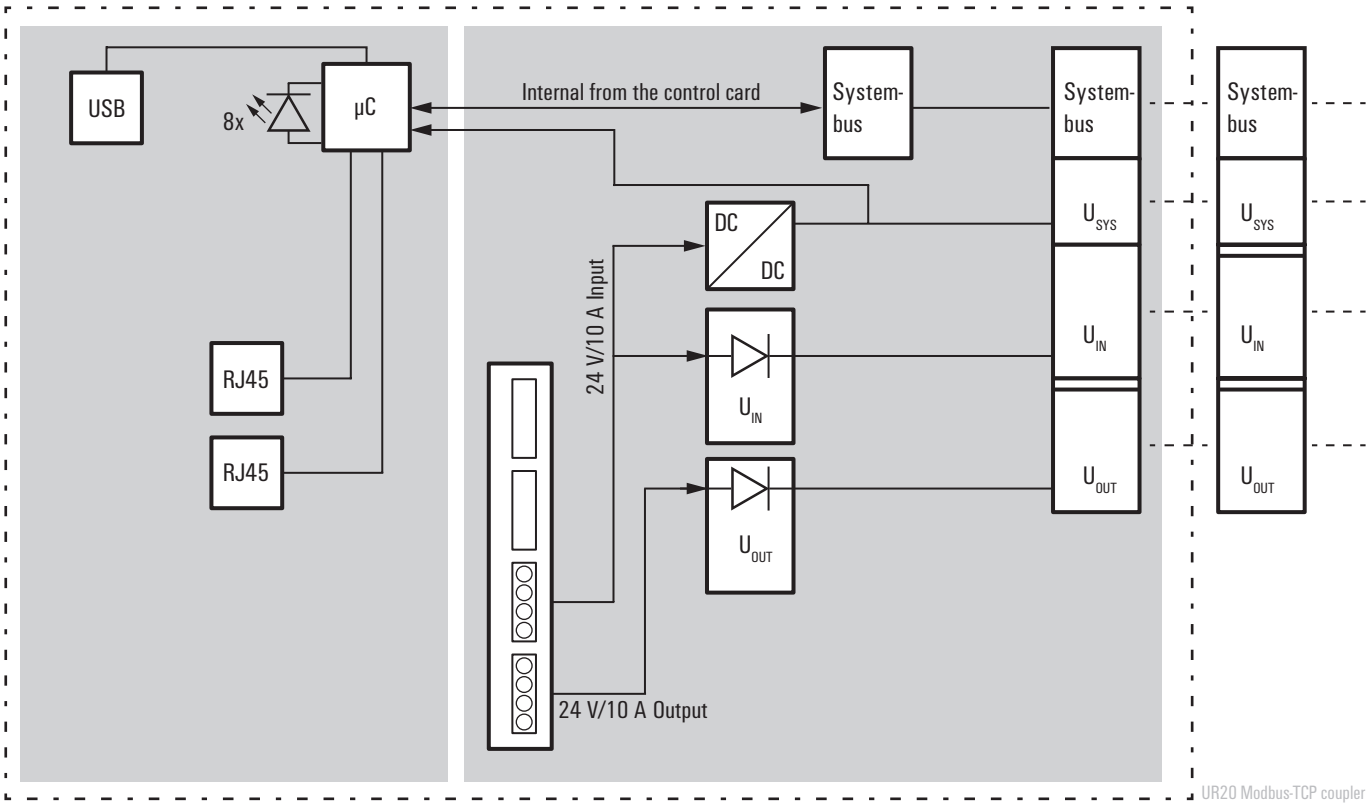

Modbus-TCP

- 2 x 10 A current paths
- Various Modbus services
- Web server
- System supply of 64 I/O-modules
- Temperature range -20... +60 °C

UR20-FBC-MOD-TCP

Technical data

System data	
Connection	2 x RJ-45
Field bus protocol	Modbus TCP
Process data	8 kByte
Parameter data	1.024 Byte
Diagnostic data	1.024 Byte
Max. number of modules	64
Configuration interface	USB 2.0
Transmission rate of field bus	100 Mbit/s
Transmission speed of u-remote system bus	48 Mbit/s
Supply	
Supply voltage for system and inputs	24 V DC +20 % / -15 %
Supply voltage for outputs	24 V DC +20 % / -15 %
Feed current for input modules, max.	10 A
Feed current for output modules, max.	10 A
Current consumption (I_{IN} in power segment of field bus coupler), typ.	112 mA
General data	
Weight	220 g
Dimensions (H/W/D)	120 mm (with catch lever 128 mm) x 52 mm x 76 mm

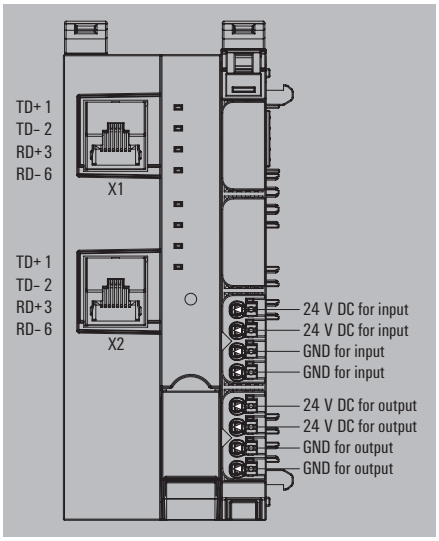

Ordering data

Module variants	Type	Qty.	Order No.
Field bus coupler, Modbus TCP	UR20-FBC-MOD-TCP	1	1334930000

Accessories

	Type	Qty.	Order No.
Coding elements	KOSM BHZ5.00	100	1483050000
Termination kit	UR20-EBK-ACC	5	1346610000
Swivel marker	UR20-SM-ACC	20	1339920000
Connection marker for pusher custom printing	PM 2.7/2.6 MC SDR	192	1323700000
Connection marker for pusher neutral	PM 2.7/2.6 MC NE WS	960	1323710000
Module marker for custom printing	DEK 5/8-11.5 MC SDR	100	1341610000
Module marker for neutral	DEK 5/8-11.5 MC NE WS	500	1341630000
Thermotransfer version (Material: Polyester)	THM UR20 GE *1)	1	1429910000
Thermotransfer version (Material: Polyester)	THM UR20 WS *1)	1	1429420000
Paper version for Laserprinter	ESO UR20 DIN A4 WS *2)	10	1429430000
Replacement parts			
Plug-in connector unit	UR20-PK-FBC-SP	5	1346580000
Note	*1) 1 roll = 1000 label = 1 Qty. *2) 1 sheet = 60 label = 1 Qty.		

Product standard	IEC 61131-2
EMC	EN 61000
ATEX	EN 60079
UL (in preparation)	UL 508

Let's connect.

Digital input modules

Positively-switching; Reverse polarity protection

Digital input modules from Weidmüller are available in different versions and are used primarily to receive binary control signals from sensors, transmitters, switches or proximity switches. Thanks to their flexible design, they will satisfy your need for well coordinated project planning with reserve potential.

All modules are available with 4, 8 or 16 inputsand comply fully with IEC 61131-2. The digital inputs are for Type 1 and Type 3 sensors in accordance with the standard. With a maximum input frequency of up to 1 kHz, they are used in many different applications. The variant for PLC interface units enables rapid cabling to the proven Weidmüller interface sub-assemblies using system cables. This ensures rapid incorporation in your overall system. Two modules with timestamp function are able to capture binary signals and to provide a timestamp in 1 µs resolution.

The module electronics supply the connected sensors from the input current path (U_{IN}).

UR20-4DI-P block diagram by way of example

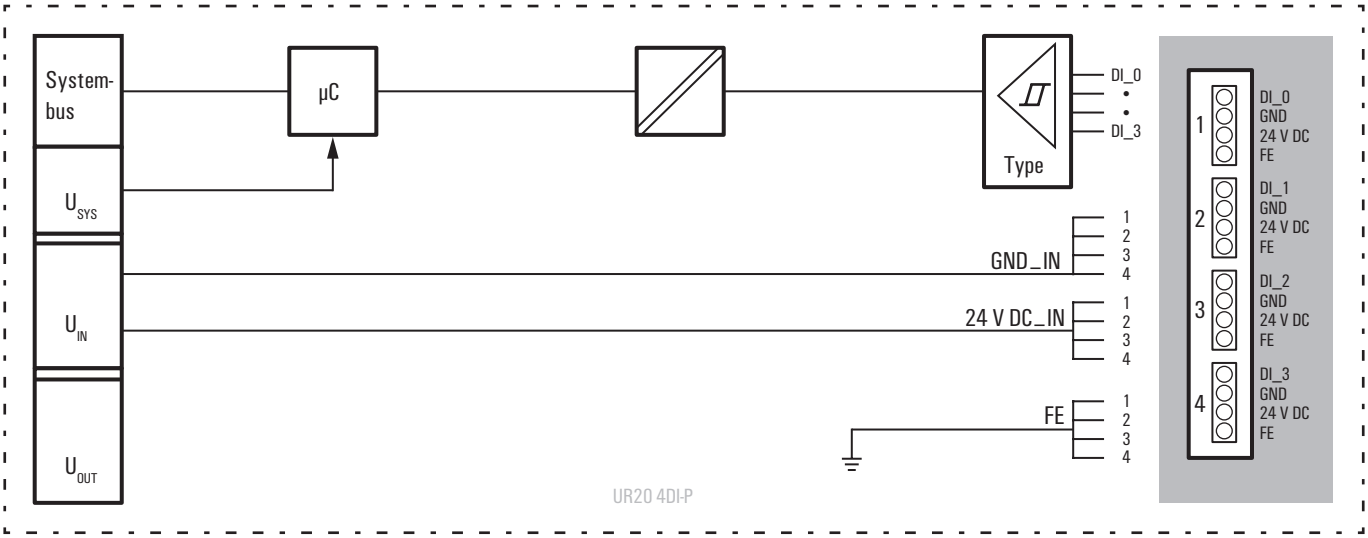

4 DI

- 4 digital inputs for sensors such as transmitters, switches and proximity sensors
- Positively-switching
- Reverse polarity protection
- 2-wire, 3-wire, 3-wire+FE connection
- Input filter can be set channel by channel
- Integrated sensor supply
- Types 1 and 3 acc. to IEC 61131-2
- Hysteresis > 1 V

UR20-4DI-P

Technical data

System data	
Interface	u-remote system bus
Transmission rate of system bus	48 Mbit/s
Galvanic isolation	yes, DC 500 V between current paths
Supply	
Voltage supply	24 V DC +20 % / –15 % via the system bus
Current consumption (I_{IN} in power segment of field bus coupler), typ.	8 mA
Current consumption (I_{IN} in the respective power segment)	< 12 mA + sensor feed
Digital inputs	
Number	4
Input Type	Types 1 and 3, IEC 61131-2
Input filter	adjustable, up to 40 ms
Input voltage, low	< 5 V
Input voltage, high	> 11 V
Sensor supply	yes
Sensor connection	2-wire, 3-wire, 3-wire+FE
Reverse polarity protection	yes
Module diagnosis	yes
Individual channel diagnosis	no
General data	
Weight	87 g
Dimensions (H/W/D)	120 mm (with catch lever 128 mm) x 11,5 mm x 76 mm

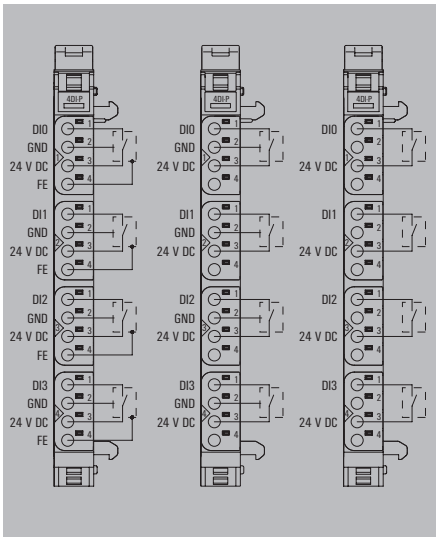

Ordering data

Module variants	Type	Qty.	Order No.
Digital input module, 4 channels	UR20-4DI-P	1	1315170000

Accessories

	Type	Qty.	Order No.
Coding elements	KOSM BHZ5.00	100	1483050000
Termination kit	UR20-EBK-ACC	5	1346610000
Swivel marker	UR20-SM-ACC	20	1339920000
Connection marker for pusher custom printing	PM 2.7/2.6 MC SDR	192	1323700000
Connection marker for pusher neutral	PM 2.7/2.6 MC NE WS	960	1323710000
Module marker for custom printing	DEK 5/8-11.5 MC SDR	100	1341610000
Module marker for neutral	DEK 5/8-11.5 MC NE WS	500	1341630000
Thermotransfer version (Material: Polyester)	THM UR20 GE *1)	1	1429910000
Thermotransfer version (Material: Polyester)	THM UR20 WS *1)	1	1429420000
Paper version for Laserprinter	ESO UR20 DIN A4 WS *2)	10	1429430000
Replacement parts			
Electronics module	UR20-4DI-P-SP	1	1346640000
Basic module	UR20-BM-SP	5	1350930000
Plug-in connector unit	UR20-PK-4W-SP	5	1346440000
Note	*1) 1 roll = 1000 label = 1 Qty. *2) 1 sheet = 60 label = 1 Qty.		

Product standard	IEC 61131-2
EMC	EN 61000
ATEX	EN 60079
UL (in preparation)	UL 508

Let's connect.

8 DI-2W

- 8 digital inputs for sensors such as transmitters, switches and proximity sensors
- Positively-switching
- Reverse polarity protection
- 2-wire connection
- Input filter can be set channel by channel
- Types 1 and 3 acc. to IEC 61131-2
- Hysteresis > 1 V

UR20-8DI-P-2W

Product available
ANNOUNCEMENT
as of 2014

Technical data

System data	
Interface	u-remote system bus
Transmission rate of system bus	48 Mbit/s
Galvanic isolation	yes, DC 500 V between current paths
Supply	
Voltage supply	24 V DC +20 % / –15 % via the system bus
Current consumption (I_{IN} in power segment of field bus coupler), typ.	8 mA
Current consumption (I_{IN} in the respective power segment)	< 22 mA
Digital inputs	
Number	8
Input Type	Types 1 and 3, IEC 61131-2
Input filter	adjustable, up to 40 ms
Input voltage, low	< 5 V
Input voltage, high	> 11 V
Sensor supply	no
Sensor connection	2-wire
Reverse polarity protection	yes
Module diagnosis	yes
Individual channel diagnosis	no
General data	
Weight	83 g
Dimensions (H/W/D)	120 mm (with catch lever128 mm) x 11,5 mm x 76 mm

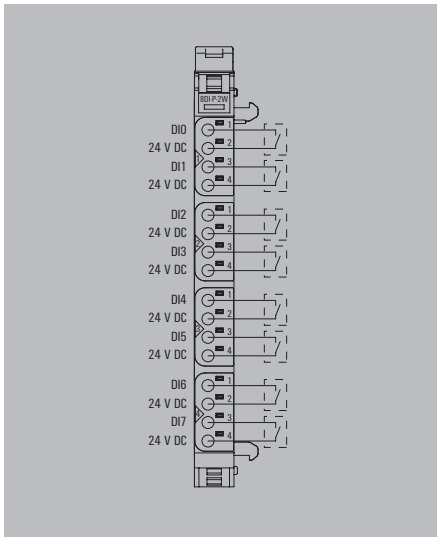

Ordering data

Module variants	Type	Qty.	Order No.
Digital input module, 8 channels, 2-wire	UR20-8DI-P-2W	1	1315180000

Accessories

	Type	Qty.	Order No.
Coding elements	KOSM BHZ5.00	100	1483050000
Termination kit	UR20-EBK-ACC	5	1346610000
Swivel marker	UR20-SM-ACC	20	1339920000
Connection marker for pusher custom printing	PM 2.7/2.6 MC SDR	192	1323700000
Connection marker for pusher neutral	PM 2.7/2.6 MC NE WS	960	1323710000
Module marker for custom printing	DEK 5/8-11.5 MC SDR	100	1341610000
Module marker for neutral	DEK 5/8-11.5 MC NE WS	500	1341630000
Thermotransfer version (Material: Polyester)	THM UR20 GE *1)	1	1429910000
Thermotransfer version (Material: Polyester)	THM UR20 WS *1)	1	1429420000
Paper version for Laserprinter	ESO UR20 DIN A4 WS *2)	10	1429430000
Replacement parts			
Electronics module	UR20-8DI-P-SP	1	1346650000
Basic module	UR20-BM-SP	5	1350930000
Plug-in connector unit	UR20-PK-2W-P-SP	5	1346430000

Note

*1) 1 roll = 1000 label = 1 Qty.
*2) 1 sheet = 60 label = 1 Qty.

Product standard	IEC 61131-2
EMC	EN 61000
ATEX	EN 60079
UL (in preparation)	UL 508

Let's connect.

8 DI-3W

- 8 digital inputs for sensors such as transmitters, switches and proximity sensors
- Positively-switching
- Reverse polarity protection
- 2-wire and 3-wire connection
- Input filter can be set channel by channel
- Integrated sensor supply
- Types 1 and 3 acc. to IEC 61131-2
- Hysteresis > 1 V

UR20-8DI-P-3W

Technical data

System data	
Interface	u-remote system bus
Transmission rate of system bus	48 Mbit/s
Galvanic isolation	yes, DC 500 V between current paths
Supply	
Voltage supply	24 V DC +20 % / –15 % via the system bus
Current consumption (I_{IN} in power segment of field bus coupler), typ.	8 mA
Current consumption (I_{IN} in the respective power segment)	< 22 mA + sensor feed
Digital inputs	
Number	8
Input Type	Types 1 and 3, IEC 61131-2
Input filter	adjustable, up to 40 ms
Input voltage, low	< 5 V
Input voltage, high	> 11 V
Sensor supply	yes
Sensor connection	2-wire, 3-wire
Reverse polarity protection	yes
Module diagnosis	yes
Individual channel diagnosis	no
General data	
Weight	83 g
Dimensions (H/W/D)	120 mm (with catch lever128 mm) x 11,5 mm x 76 mm

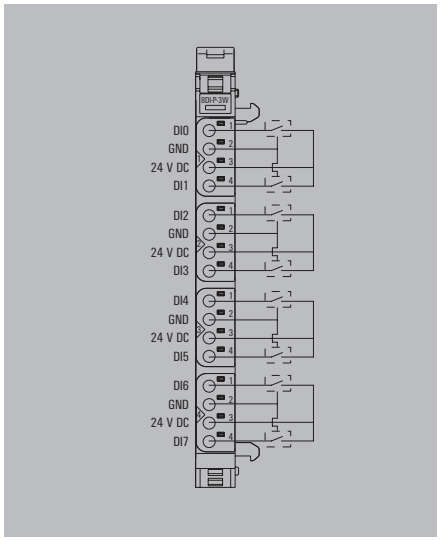

Ordering data

Module variants	Type	Qty.	Order No.
Digital input module, 8 channels, 3-wire	UR20-8DI-P-3W	1	1394400000

Accessories

	Type	Qty.	Order No.
Coding elements	KOSM BHZ5.00	100	1483050000
Termination kit	UR20-EBK-ACC	5	1346610000
Swivel marker	UR20-SM-ACC	20	1339920000
Connection marker for pusher custom printing	PM 2.7/2.6 MC SDR	192	1323700000
Connection marker for pusher neutral	PM 2.7/2.6 MC NE WS	960	1323710000
Module marker for custom printing	DEK 5/8-11.5 MC SDR	100	1341610000
Module marker for neutral	DEK 5/8-11.5 MC NE WS	500	1341630000
Thermotransfer version (Material: Polyester)	THM UR20 GE *1)	1	1429910000
Thermotransfer version (Material: Polyester)	THM UR20 WS *1)	1	1429420000
Paper version for Laserprinter	ESO UR20 DIN A4 WS *2)	10	1429430000
Replacement parts			
Electronics module	UR20-8DI-P-3W-SP	1	1434220000
Basic module	UR20-BM-SP	5	1350930000
Plug-in connector unit	UR20-PK-3W-P-SP	5	1411430000
Note	*1) 1 roll = 1000 label = 1 Qty. *2) 1 sheet = 60 label = 1 Qty.		

Product standard	IEC 61131-2
EMC	EN 61000
ATEX	EN 60079
UL (in preparation)	UL 508

Let's connect.

16 DI

- 16 digital inputs
- Positively-switching
- Reverse polarity protection
- 1-wire connection
- Permanently set input filter, 3 ms
- Types 1 and 3 acc. to IEC 61131-2
- Hysteresis > 1 V

UR20-16DI-P

Technical data

System data	
Interface	u-remote system bus
Transmission rate of system bus	48 Mbit/s
Galvanic isolation	yes, DC 500 V between current paths
Supply	
Voltage supply	24 V DC +20 % / –15 % via the system bus
Current consumption (I_{IN} in power segment of field bus coupler), typ.	8 mA
Current consumption (I_{IN} in the respective power segment)	< 42 mA
Digital inputs	
Number	16
Input Type	Types 1 and 3, IEC 61131-2
Input filter	3 ms
Input voltage, low	< 5 V
Input voltage, high	> 11 V
Sensor supply	no
Sensor connection	1-wire
Reverse polarity protection	yes
Module diagnosis	yes
Individual channel diagnosis	no
General data	
Weight	87 g
Dimensions (H/W/D)	120 mm (with catch lever128 mm) x 11,5 mm x 76 mm

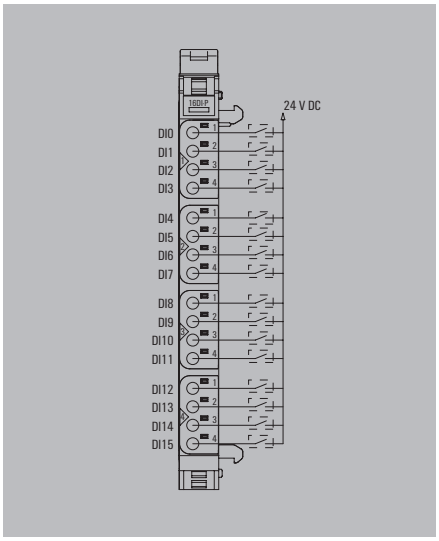

Ordering data

Module variants	Type	Qty.	Order No.
Digital input module, 16 channels	UR20-16DI-P	1	**1315200000**

Accessories

	Type	Qty.	Order No.
Coding elements	KOSM BHZ5.00	100	**1483050000**
Termination kit	UR20-EBK-ACC	5	**1346610000**
Swivel marker	UR20-SM-ACC	20	**1339920000**
Connection marker for pusher custom printing	PM 2.7/2.6 MC SDR	192	**1323700000**
Connection marker for pusher neutral	PM 2.7/2.6 MC NE WS	960	**1323710000**
Module marker for custom printing	DEK 5/8-11.5 MC SDR	100	**1341610000**
Module marker for neutral	DEK 5/8-11.5 MC NE WS	500	**1341630000**
Thermotransfer version (Material: Polyester)	THM UR20 GE *1)	1	**1429910000**
Thermotransfer version (Material: Polyester)	THM UR20 WS *1)	1	**1429420000**
Paper version for Laserprinter	ESO UR20 DIN A4 WS *2)	10	**1429430000**
Replacement parts			
Electronics module	UR20-16DI-P-SP	1	**1346680000**
Basic module	UR20-BM-SP	5	**1350930000**
Plug-in connector unit	UR20-PK-1W-SP	5	**1346400000**
Note	*1) 1 roll = 1000 label = 1 Qty. *2) 1 sheet = 60 label = 1 Qty.		

Product standard	IEC 61131-2
EMC	EN 61000
ATEX	EN 60079
UL (in preparation)	UL 508

Let's connect.

16 DI-PLC

- 16 digital inputs
- Positively-switching
- Reverse polarity protection
- For connecting a PLC interface element
- Permanently set input filter, 3 ms
- Types 1 and 3 acc. to IEC 61131-2
- Hysteresis > 1 V

UR20-16DI-P-PLC-INT

Technical data

System data	
Interface	u-remote system bus
Transmission rate of system bus	48 Mbit
Galvanic isolation	yes, DC 500 V between current paths
Supply	
Voltage supply	24 V DC +20 % / –15 % via the system bus
Current consumption (I_{IN} in power segment of field bus coupler), typ.	8 mA
Current consumption (I_{IN} external)	< 42 mA
Digital inputs	
Number	16
Input Type	Types 1 and 3, IEC 61131-2
Input filter	3 ms
Input voltage, low	< 5 V
Input voltage, high	> 11 V
Sensor supply	external
Sensor connection	PLC interface
Reverse polarity protection	yes
Module diagnosis	yes
Individual channel diagnosis	no
General data	
Weight	73 g
Dimensions (H/W/D)	120 mm (with catch lever128 mm) x 11,5 mm x 76 mm

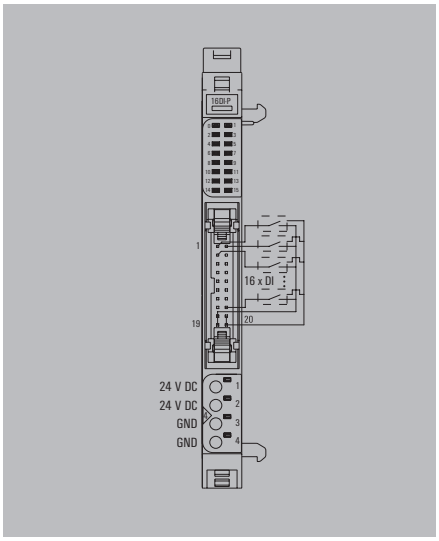

Ordering data

Module variants	Type	Qty.	Order No.
Digital input module, 16 channels, PLC interface	UR20-16DI-P-PLC-INT	1	1315210000

Accessories

	Type	Qty.	Order No.
Coding elements	KOSM BHZ5.00	100	1483050000
Termination kit	UR20-EBK-ACC	5	1346610000
Swivel marker	UR20-SM-ACC	20	1339920000
Connection marker for pusher custom printing	PM 2.7/2.6 MC SDR	192	1323700000
Connection marker for pusher neutral	PM 2.7/2.6 MC NE WS	960	1323710000
Module marker for custom printing	DEK 5/8-11.5 MC SDR	100	1341610000
Module marker for neutral	DEK 5/8-11.5 MC NE WS	500	1341630000
Thermotransfer version (Material: Polyester)	THM UR20 GE *1)	1	1429910000
Thermotransfer version (Material: Polyester)	THM UR20 WS *1)	1	1429420000
Paper version for Laserprinter	ESO UR20 DIN A4 WS *2)	10	1429430000
Replacement parts			
Electronics module	UR20-16DI-P-PLC-INT-SP	1	1346690000
Basic module	UR20-BM-SP	5	1350930000
Plug-in connector unit	UR20-PK-PLC-SP	5	1346590000
PLC interface element	RS 16IO 1W H S	1	9445700000
Note	*1) 1 roll = 1000 label = 1 Qty. *2) 1 sheet = 60 label = 1 Qty.		

Product standard	IEC 61131-2
EMC	EN 61000
ATEX	EN 60079
UL (in preparation)	UL 508

Let's connect.

2DI-P-TS

- 2 digital inputs for sensors such as transmitters, switches and proximity sensors
- Positively-switching
- 2-wire, 3-wire, 3-wire+FE connection
- Input filter can be set channel by channel
- Types 1 and 3 acc. to IEC 61131-2
- 1 µs Timestamp resolution
- Hysteresis > 1 V

UR20-2DI-P-TS

Technical data

System data	
Interface	u-remote system bus
Transmission rate of system bus	48 Mbit/s
Galvanic isolation	yes, DC 500 V between current paths
Supply	
Voltage supply	24 V DC +20 % / –15 % via the system bus
Current consumption (I_{IN} in power segment of field bus coupler), typ.	8 mA
Current consumption (I_{IN} in the respective power segment)	< 10 mA + sensor feed
Digital Inputs	
Number	2
Input Type	Type 1 und 3, IEC 61131-2
Input filter	adjustable, up to 40 ms
Input voltage, low	< 5 V
Input voltage, high	> 11 V
Sensor supply	yes
Sensor connection	2-wire, 3-wire, 3-wire+FE
Reverse polarity protection	yes
Module diagnosis	yes
Individual channel diagnosis	no
Data width Timestamp	16 Bit
Resolution Timestamp	1 µs
General data	
Weight	83 g
Dimensions (H/W/D)	120 mm (with catch lever 128 mm) x 11.5 mm x 76 mm

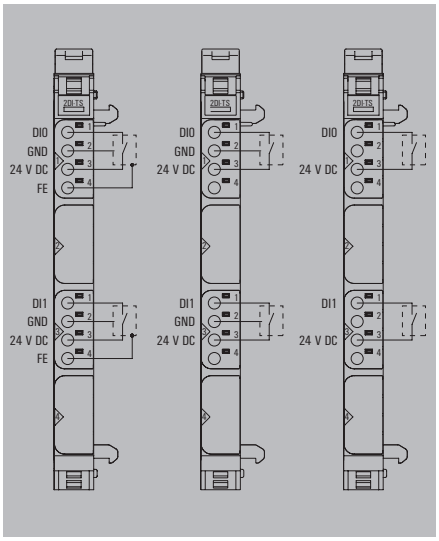

Ordering data

Module variants	Type	Qty.	Order No.
Digital input module, 2 channels, Timestamp	UR20-2DI-P-TS	1	1460140000

Accessories

	Type	Qty.	Order No.
Coding elements	KOSM BHZ5.00	100	1483050000
Termination kit	UR20-EBK-ACC	5	1346610000
Swivel marker	UR20-SM-ACC	20	1339920000
Connection marker for pusher custom printing	PM 2.7/2.6 MC SDR	192	1323700000
Connection marker for pusher neutral	PM 2.7/2.6 MC NE WS	960	1323710000
Module marker for custom printing	DEK 5/8-11.5 MC SDR	100	1341610000
Module marker for neutral	DEK 5/8-11.5 MC NE WS	500	1341630000
Thermotransfer version (Material: Polyester)	THM UR20 GE *1)	1	1429910000
Thermotransfer version (Material: Polyester)	THM UR20 WS *1)	1	1429420000
Paper version for Laserprinter	ESO UR20 DIN A4 WS *2)	10	1429430000
Replacement parts			
Electronics module	UR20-2DI-P-TS-SP	1	1463690000
Basic module	UR20-BM-SP	5	1350930000
Plug-in connector unit	UR20-PK-PWM-SP	5	1346550000
Note	*1) 1 roll = 1000 label = 1 Qty. *2) 1 sheet = 60 label = 1 Qty.		

Product standard	IEC 61131-2
EMC	EN 61000
ATEX	EN 60079
UL (in preparation)	UL 508

Let's connect.

4DI-P-TS

- 4 digital inputs for sensors such as transmitters, switches and proximity sensors
- Positively-switching
- 2-wire, 3-wire, 3-wire+FE connection
- Input filter can be set channel by channel
- Types 1 and 3 acc. to IEC 61131-2
- 1 µs Timestamp resolution
- Hysteresis > 1 V

UR20-4DI-P-TS

Technical data

System data	
Interface	u-remote system bus
Transmission rate of system bus	48 Mbit/s
Galvanic isolation	yes, DC 500 V between current paths
Supply	
Voltage supply	24 V DC +20 % / –15 % via the system bus
Current consumption (I_{IN} in power segment of field bus coupler), typ.	8 mA
Current consumption (I_{IN} in the respective power segment)	< 10 mA + sensor feed
Digital Inputs	
Number	4
Input Type	Types 1 and 3, IEC 61131-2
Input filter	adjustable, up to 40 ms
Input voltage, low	< 5 V
Input voltage, high	> 11 V
Sensor supply	yes
Sensor connection	2-wire, 3-wire, 3-wire+FE
Reverse polarity protection	yes
Module diagnosis	yes
Individual channel diagnosis	no
Data width Timestamp	16 Bit
Resolution Timestamp	1 µs
General data	
Weight	87 g
Dimensions (H/W/D)	120 mm (with catch lever 128 mm) x 11.5 mm x 76 mm

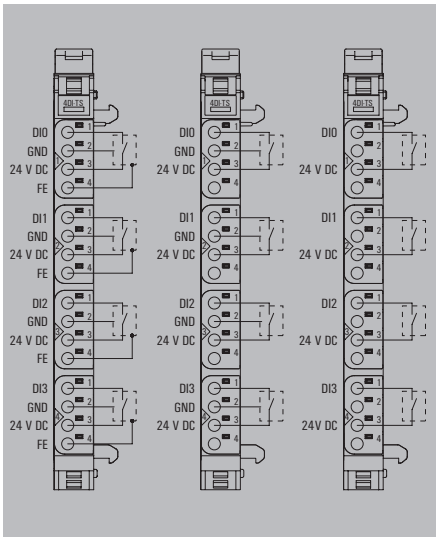

Ordering data

Module variants	Type	Qty.	Order No.
Digital input module, 4 channels, Timestamp	UR20-4DI-P-TS	1	1460150000

Accessories

	Type	Qty.	Order No.
Coding elements	KOSM BHZ5.00	100	1483050000
Termination kit	UR20-EBK-ACC	5	1346610000
Swivel marker	UR20-SM-ACC	20	1339920000
Connection marker for pusher custom printing	PM 2.7/2.6 MC SDR	192	1323700000
Connection marker for pusher neutral	PM 2.7/2.6 MC NE WS	960	1323710000
Module marker for custom printing	DEK 5/8-11.5 MC SDR	100	1341610000
Module marker for neutral	DEK 5/8-11.5 MC NE WS	500	1341630000
Thermotransfer version (Material: Polyester)	THM UR20 GE *1)	1	1429910000
Thermotransfer version (Material: Polyester)	THM UR20 WS *1)	1	1429420000
Paper version for Laserprinter	ESO UR20 DIN A4 WS *2)	10	1429430000
Replacement parts			
Electronics module	UR20-4DI-P-TS-SP	1	1463680000
Basic module	UR20-BM-SP	5	1350930000
Plug-in connector unit	UR20-PK-4W-SP	5	1346440000
Note	*1) 1 roll = 1000 label = 1 Qty. *2) 1 sheet = 60 label = 1 Qty.		

Product standard	IEC 61131-2
EMC	EN 61000
ATEX	EN 60079
ATEXUL (in preparation)	UL 508

Let's connect.

Digital output modules

Positively-switching; short-circuit-proof; up to 3-wire+FE

Digital output modules are available in the following variants: 4DO, 8DO with 2-wire technology, 16DO with or without PLC interface connection. They are used primarily for incorporating decentralised actuators.
All outputs are designed for DC-13 actuators acc. to DIN EN 60947-5-1 and IEC 61131-2 specification. Just like the digital input modules, frequencies of up to 1 kHz are possible. Maximum system safety is ensured by protecting the outputs. This consists of an automatic restart following a short-circuit. Clearly recognisable LEDs also signal the status of the entire module as well as individual channels.

In addition to the standard applications of the digital output modules, the portfolio also includes special variants, such as the 4RO-SSR module for rapidly switching applications. Fitted with solid state technology, 0.5 A is available for each output. Furthermore, there is also the 4RO-CO relay module for power-intensive applications. This is equipped with four change-over contacts, optimised for a switching voltage of 277 V AC and designed for a switching current of 6 A. To serve negative switching requirements there is a parameterizable version of the 4DO Module.

The module electronics supply the connected actuators from the output current path (U_{OUT}).

UR20-4DO-P block diagram by way of example

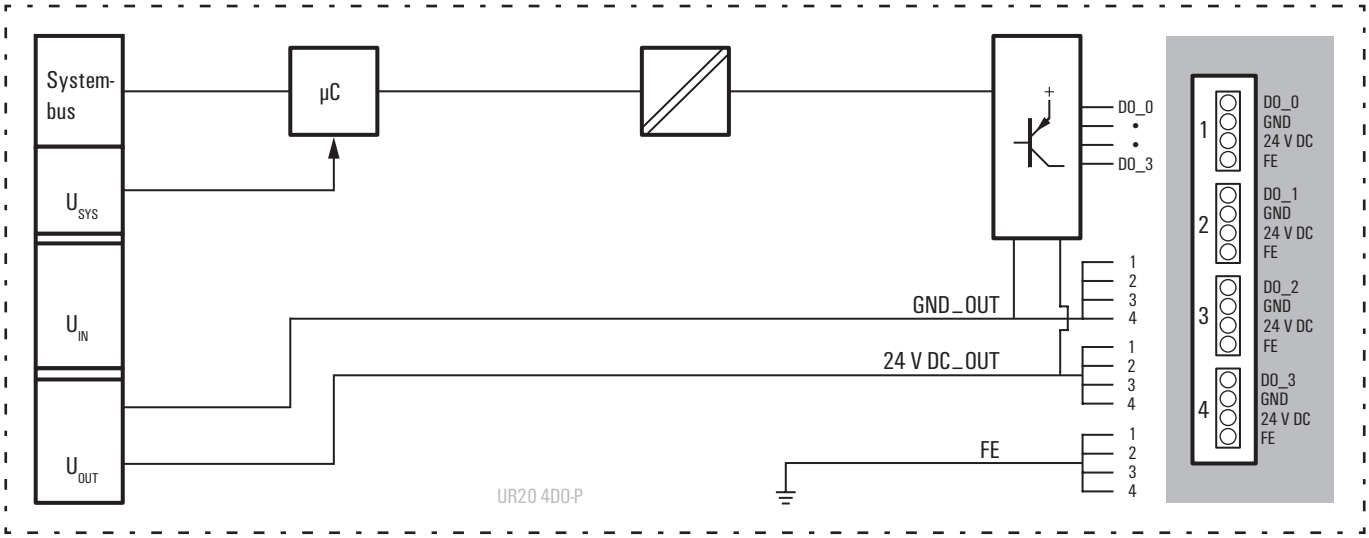

4 DO

- 4 digital outputs
- Can be loaded up to 0.5 A per channel
- Short-circuit-proof
- 2-wire, 3-wire, 3-wire+FE connection
- Positively-switching
- DC-13 load
- IEC 61131-2 compliant

UR20-4DO-P

Technical data

System data	
Interface	u-remote system bus
Transmission rate of system bus	48 Mbit/s
Galvanic isolation	yes, DC 500 V between current paths
Supply	
Voltage supply	24 V DC +20 % / –15 % via the system bus
Current consumption (I_{IN} in power segment of field bus coupler), typ.	8 mA
Current consumption (I_{OUT} in the respective power segment)	10 mA + load
Digital outputs	
Number	4
Type of load	ohmic, inductive, lamp load
Response time, high	100 µs
Response time, low	250 µs
Output current per channel, max.	0.5 A
Output current per module, max.	2 A
Switching frequency max.	
Resistive load (min. 47 Ω)	1 kHz
Inductive load (DC 13)	2 Hz
Lamp load (12 W)	1 kHz
Actuator connection	2-wire, 3-wire, 3-wire+FE
Short-circuit-proof	thermal
Nonreactiv	yes
Module diagnosis	yes
Individual channel diagnosis	no
Shut-down energy (inductive)	150 mJ / channel
Response time of protective circuit (current limitation)	< 100 µs (ambient temperature dependent)
General data	
Weight	86 g
Dimensions (H/W/D)	120 mm (with catch lever128 mm) x 11,5 mm x 76 mm

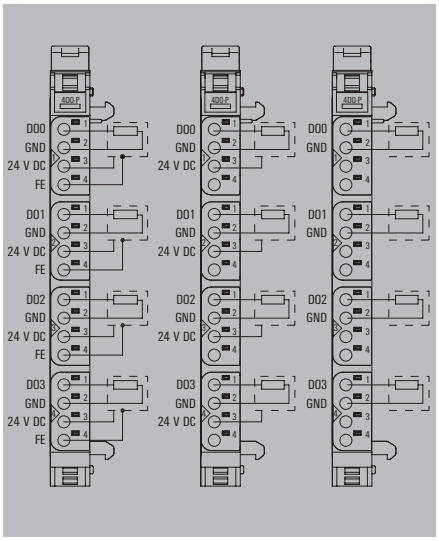

Ordering data

Module variants	Type	Qty.	Order No.
Digital output module, 4 channels	UR20-4DO-P	1	1315220000

Accessories

	Type	Qty.	Order No.
Coding elements	KOSM BHZ5.00	100	1483050000
Termination kit	UR20-EBK-ACC	5	1346610000
Swivel marker	UR20-SM-ACC	20	1339920000
Connection marker for pusher custom printing	PM 2.7/2.6 MC SDR	192	1323700000
Connection marker for pusher neutral	PM 2.7/2.6 MC NE WS	960	1323710000
Module marker for custom printing	DEK 5/8-11.5 MC SDR	100	1341610000
Module marker for neutral	DEK 5/8-11.5 MC NE WS	500	1341630000
Thermotransfer version (Material: Polyester)	THM UR20 GE *1)	1	1429910000
Thermotransfer version (Material: Polyester)	THM UR20 WS *1)	1	1429420000
Paper version for Laserprinter	ESO UR20 DIN A4 WS *2)	10	1429430000
Replacement parts			
Electronics module	UR20-4DO-P-SP	1	1346700000
Basic module	UR20-BM-SP	5	1350930000
Plug-in connector unit	UR20-PK-4W-SP	5	1346440000
Note	*1) 1 roll = 1000 label = 1 Qty. *2) 1 sheet = 60 label = 1 Qty.		

Product standard	IEC 61131-2
EMC	EN 61000
ATEX	EN 60079
UL (in preparation)	UL 508

Let's connect.

4 DO-2A

- 4 digital outputs
- Module can be loaded up to 8 A
- Can be loaded up to 2 A per channel
- Short-circuit-proof
- 2-wire, 3-wire, 3-wire+FE connection
- Positively-switching
- DC-13 load
- IEC 61131-2 compliant

UR20-4DO-P-2A

Technical data

System data	
Interface	u-remote system bus
Transmission rate of system bus	48 Mbit/s
Galvanic isolation	yes, DC 500 V between current paths
Supply	
Voltage supply	24 V DC +20 % / –15 % via the system bus
Current consumption (I_{IN} in power segment of field bus coupler), typ.	8 mA
Current consumption (I_{OUT} in the respective power segment)	10 mA + load
Digital outputs	
Number	4
Type of load	ohmic, inductive, lamp load
Response time, high	100 µs
Response time, low	250 µs
Output current per channel, max.	2 A
Output current per module, max.	8 A
Switching frequency max.	
Resistive load (min. 47 Ω)	1 kHz
Inductive load (DC 13)	2 Hz
Lamp load (12 W)	1 kHz
Actuator connection	2-wire, 3-wire, 3-wire+FE
Short-circuit-proof	thermal
Nonreactiv	yes
Module diagnosis	yes
Individual channel diagnosis	no
Shut-down energy (inductive)	150 mJ / channel
Response time of protective circuit (current limitation)	< 100 µs (ambient temperature dependent)
General data	
Weight	86 g
Dimensions (H/W/D)	120 mm (with catch lever128 mm) x 11,5 mm x 76 mm

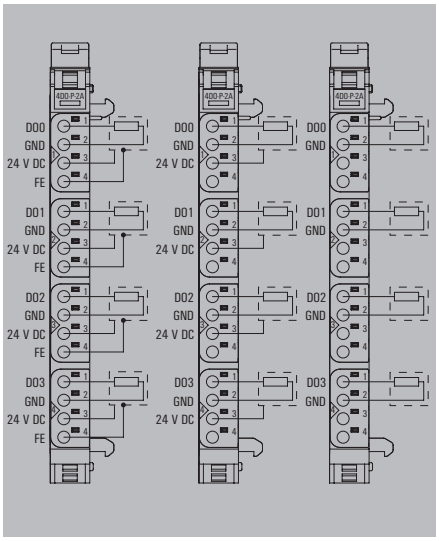

Ordering data

Module variants	Type	Qty.	Order No.
Digital output module, 4 channels, 2 A	UR20-4DO-P-2A	1	1315230000

Accessories

	Type	Qty.	Order No.
Coding elements	KOSM BHZ5.00	100	1483050000
Termination kit	UR20-EBK-ACC	5	1346610000
Swivel marker	UR20-SM-ACC	20	1339920000
Connection marker for pusher custom printing	PM 2.7/2.6 MC SDR	192	1323700000
Connection marker for pusher neutral	PM 2.7/2.6 MC NE WS	960	1323710000
Module marker for custom printing	DEK 5/8-11.5 MC SDR	100	1341610000
Module marker for neutral	DEK 5/8-11.5 MC NE WS	500	1341630000
Thermotransfer version (Material: Polyester)	THM UR20 GE *1)	1	1429910000
Thermotransfer version (Material: Polyester)	THM UR20 WS *1)	1	1429420000
Paper version for Laserprinter	ESO UR20 DIN A4 WS *2)	10	1429430000
Replacement parts			
Electronics module	UR20-4DO-P-2A-SP	1	1346710000
Basic module	UR20-BM-SP	5	1350930000
Plug-in connector unit	UR20-PK-4W-SP	5	1346440000
Note	*1) 1 roll = 1000 label = 1 Qty. *2) 1 sheet = 60 label = 1 Qty.		

Product standard	IEC 61131-2
EMC	EN 61000
ATEX	EN 60079
UL (in preparation)	UL 508

Let's connect.

4DO-PN-2A

- 4 digital outputs
- Module can be loaded up to 8 A
- Can be loaded up to 2 A per channel
- Short-circuit-proof
- Positively or negatively switching
- 2-wire, 3-wire, 3-wire+FE connection
- IEC 61131-2 compliant

UR20-4DO-PN-2A

Technical data

System data	
Interface	u-remote system bus
Transmission rate of system bus	48 Mbit/s
Galvanic isolation	yes, DC 500 V between current paths
Supply	
Voltage supply	24 V DC +20 % / –15 % via the system bus
Current consumption (I_{IN} in power segment of field bus coupler), typ.	8 mA
Current consumption (I_{OUT} in the respective power segment)	10 mA + load
Digital Inputs	
Number	4
Positively or negatively switching	parameterise
Type of load	ohmic, inductive, lamp load
Response time, high	100 µs
Response time, low	250 µs
Output current per channel, max.	2 A
Output current per module, max.	8 A
Switching frequency max.	
Resistive load (min. 47 Ohm)	1 kHz
Inductive load (DC 13)	2 Hz
Lamp load (12 W)	1 kHz
Actuator connection	2-wire, 3-wire, 3-wire+FE
Short-circuit-proof	thermal
Nonreactiv	yes
Module diagnosis	yes
Individual channel diagnosis	no
Shut-down energy (inductive)	150mJ / channel
Response time of protective circuit (current limitation)	< 100 µs (ambient temperature dependent)
General data	
Weight	87 g
Dimensions (H/W/D)	120 mm (with catch lever 128 mm) x 11.5 mm x 76 mm

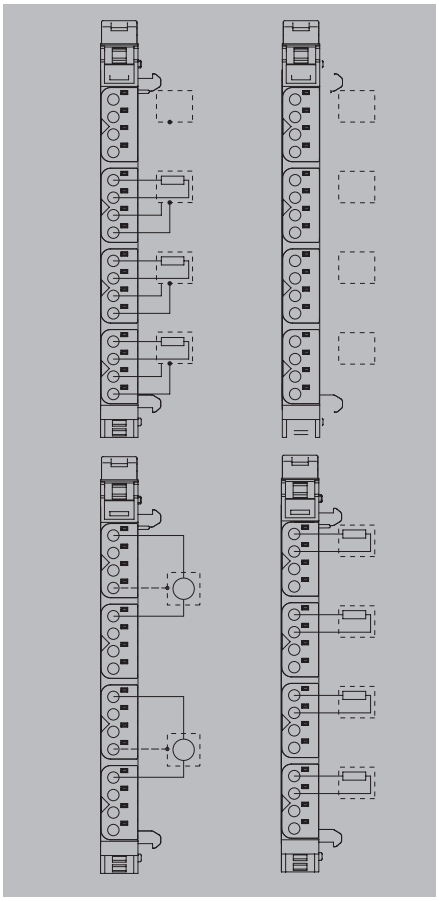

Ordering data

Module variants	Type	Qty.	Order No.
Digital output module, 4 channels, positively or negatively switching	UR20-4DO-PN-2A	1	1394420000

Accessories

	Type	Qty.	Order No.
Coding elements	KOSM BHZ5.00	100	1483050000
Termination kit	UR20-EBK-ACC	5	1346610000
Swivel marker	UR20-SM-ACC	20	1339920000
Connection marker for pusher custom printing	PM 2.7/2.6 MC SDR	192	1323700000
Connection marker for pusher neutral	PM 2.7/2.6 MC NE WS	960	1323710000
Module marker for custom printing	DEK 5/8-11.5 MC SDR	100	1341610000
Module marker for neutral	DEK 5/8-11.5 MC NE WS	500	1341630000
Thermotransfer version (Material: Polyester)	THM UR20 GE *1)	1	1429910000
Thermotransfer version (Material: Polyester)	THM UR20 WS *1)	1	1429420000
Paper version for Laserprinter	ESO UR20 DIN A4 WS *2)	10	1429430000
Ersatzteile			
Electronics module	UR20-4DO-PN-2A-SP	1	1480950000
Basic module	UR20-BM-SP	5	1350930000
Plug-in connector unit	UR20-PK-4W-SP	5	1346440000
Note	*1) 1 roll = 1000 label = 1 Qty. *2) 1 sheet = 60 label = 1 Qty.		

Product standard	IEC 61131-2
EMC	EN 61000
ATEX	EN 60079
ATEXUL (in preparation)	UL 508

Let's connect.

8 DO

- 8 digital outputs
- Can be loaded up to 0.5 A per channel
- Short-circuit-proof
- 2-wire connection
- Positively-switching
- DC-13 load
- IEC 61131-2 compliant

UR20-8DO-P

Technical data

System data	
Interface	u-remote system bus
Transmission rate of system bus	48 Mbit/s
Galvanic isolation	yes, DC 500 V between current paths
Supply	
Voltage supply	24 V DC +20 % / –15 % via the system bus
Current consumption (I_{IN} in power segment of field bus coupler), typ.	8 mA
Current consumption (I_{OUT} in the respective power segment)	15 mA + load
Digital outputs	
Number	8
Type of load	ohmic, inductive, lamp load
Response time, high	100 µs
Response time, low	250 µs
Output current per channel, max.	0.5 A
Output current per module, max.	4 A
Switching frequency max.	
Resistive load (min. 47 Ω)	1 kHz
Inductive load (DC 13)	2 Hz
Lamp load (12 W)	1 kHz
Actuator connection	2-wire
Short-circuit-proof	thermal
Nonreactiv	yes
Module diagnosis	yes
Individual channel diagnosis	no
Shut-down energy (inductive)	150 mJ / channel
Response time of protective circuit (current limitation)	< 100 µs (ambient temperature dependent)
General data	
Weight	87 g
Dimensions (H/W/D)	120 mm (with catch lever128 mm) x 11,5 mm x 76 mm

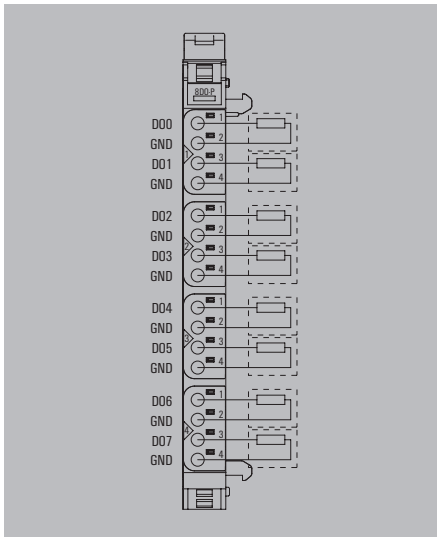

Ordering data

Module variants	Type	Qty.	Order No.
Digital output module, 8 channels	UR20-8DO-P	1	1315240000

Accessories

	Type	Qty.	Order No.
Coding elements	KOSM BHZ5.00	100	1483050000
Termination kit	UR20-EBK-ACC	5	1346610000
Swivel marker	UR20-SM-ACC	20	1339920000
Connection marker for pusher custom printing	PM 2.7/2.6 MC SDR	192	1323700000
Connection marker for pusher neutral	PM 2.7/2.6 MC NE WS	960	1323710000
Module marker for custom printing	DEK 5/8-11.5 MC SDR	100	1341610000
Module marker for neutral	DEK 5/8-11.5 MC NE WS	500	1341630000
Thermotransfer version (Material: Polyester)	THM UR20 GE *1)	1	1429910000
Thermotransfer version (Material: Polyester)	THM UR20 WS *1)	1	1429420000
Paper version for Laserprinter	ESO UR20 DIN A4 WS *2)	10	1429430000
Replacement parts			
Electronics module	UR20-8DO-P-SP	1	1346720000
Basic module	UR20-BM-SP	5	1350930000
Plug-in connector unit	UR20-PK-2W-P-SP	5	1346430000
Note	*1) 1 roll = 1000 label = 1 Qty. *2) 1 sheet = 60 label = 1 Qty.		

Product standard	IEC 61131-2
EMC	EN 61000
ATEX	EN 60079
ATEXUL (in preparation)	UL 508

Let's connect.

16 DO

- 16 digital outputs
- Can be loaded up to 0.5 A per channel
- Short-circuit-proof
- 1-wire connection
- Positively-switching
- DC-13 load
- IEC 61131-2 compliant

UR20-16DO-P

Technical data

System data	
Interface	u-remote system bus
Transmission rate of system bus	48 Mbit/s
Galvanic isolation	yes, DC 500 V between current paths
Supply	
Voltage supply	24 V DC +20 % / –15 % via the system bus
Current consumption (I_{IN} in power segment of field bus coupler), typ.	8 mA
Current consumption (I_{OUT} in the respective power segment)	20 mA + load
Digital outputs	
Number	16
Type of load	ohmic, inductive, lamp load
Response time, high	100 µs
Response time, low	250 µs
Output current per channel, max.	0.5 A
Output current per module, max.	8 A
Switching frequency max.	
Resistive load (min. 47 Ω)	1 kHz
Inductive load (DC 13)	2 Hz
Lamp load (12 W)	1 kHz
Actuator connection	1-wire
Short-circuit-proof	thermal
Nonreactiv	yes
Module diagnosis	yes
Individual channel diagnosis	no
Shut-down energy (inductive)	150 mJ / channel
Response time of protective circuit (current limitation)	< 100 µs (ambient temperature dependent)
General data	
Weight	83 g
Dimensions (H/W/D)	120 mm (with catch lever128 mm) x 11,5 mm x 76 mm

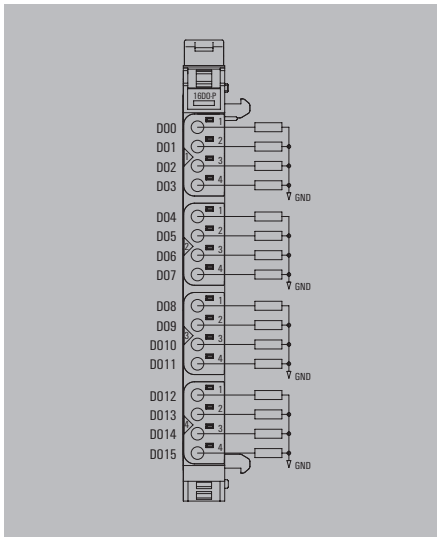

Ordering data

Module variants	Type	Qty.	Order No.
Digital output module, 16 channels	UR20-16DO-P	1	1315250000

Accessories

	Type	Qty.	Order No.
Coding elements	KOSM BHZ5.00	100	1483050000
Termination kit	UR20-EBK-ACC	5	1346610000
Swivel marker	UR20-SM-ACC	20	1339920000
Connection marker for pusher custom printing	PM 2.7/2.6 MC SDR	192	1323700000
Connection marker for pusher neutral	PM 2.7/2.6 MC NE WS	960	1323710000
Module marker for custom printing	DEK 5/8-11.5 MC SDR	100	1341610000
Module marker for neutral	DEK 5/8-11.5 MC NE WS	500	1341630000
Thermotransfer version (Material: Polyester)	THM UR20 GE *1)	1	1429910000
Thermotransfer version (Material: Polyester)	THM UR20 WS *1)	1	1429420000
Paper version for Laserprinter	ESO UR20 DIN A4 WS *2)	10	1429430000
Replacement parts			
Electronics module	UR20-16DO-P-SP	1	1346730000
Basic module	UR20-BM-SP	5	1350930000
Plug-in connector unit	UR20-PK-1W-SP	5	1346400000
Note	*1) 1 roll = 1000 label = 1 Qty. *2) 1 sheet = 60 label = 1 Qty.		

Product standard	IEC 61131-2
EMC	EN 61000
ATEX	EN 60079
ATEXUL (in preparation)	UL 508

Let's connect.

16 DO-PLC

- 16 digital outputs
- Can be loaded up to 0.5 A per channel
- Short-circuit-proof
- For connecting a PLC interface element
- Positively-switching
- DC-13 load
- IEC 61131-2 compliant

UR20-16DO-P-PLC-INT

Technical data

System data	
Interface	u-remote system bus
Transmission rate of system bus	48 Mbit/s
Galvanic isolation	yes, DC 500 V between current paths
Supply	
Voltage supply	24 V DC +20 % / –15 % via the system bus
Current consumption (I_{IN} in power segment of field bus coupler), typ.	8 mA
Current consumption (I_{OUT} external)	20 mA + load
Digital outputs	
Number	16
Type of load	ohmic, inductive, lamp load
Response time, high	100 µs
Response time, low	250 µs
Output current per channel, max.	0.5 A
Output current per module, max.	8 A (2 A with supply via a flat ribbon cable)
Switching frequency max.	
Resistive load (min. 47 Ω)	1 kHz
Inductive load (DC 13)	2 Hz
Lamp load (12 W)	1 kHz
Actuator connection	PLC interface
Short-circuit-proof	thermal
Nonreactiv	yes
Module diagnosis	yes
Individual channel diagnosis	no
Shut-down energy (inductive)	150 mJ / channel
Response time of protective circuit (current limitation)	< 100 µs (ambient temperature dependent)
General data	
Weight	82 g
Dimensions (H/W/D)	120 mm (with catch lever128 mm) x 11,5 mm x 76 mm

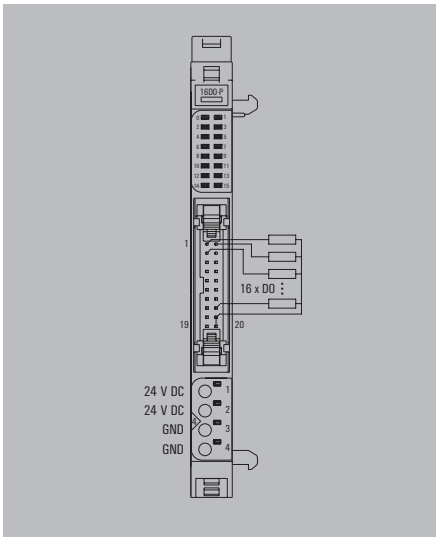

Ordering data

Module variants	Type	Qty.	Order No.
Digital output module, 16 channels, PLC interface	UR20-16DO-P-PLC-INT	1	1315270000

Accessories

	Type	Qty.	Order No.
Coding elements	KOSM BHZ5.00	100	1483050000
Termination kit	UR20-EBK-ACC	5	1346610000
Swivel marker	UR20-SM-ACC	20	1339920000
Connection marker for pusher custom printing	PM 2.7/2.6 MC SDR	192	1323700000
Connection marker for pusher neutral	PM 2.7/2.6 MC NE WS	960	1323710000
Module marker for custom printing	DEK 5/8-11.5 MC SDR	100	1341610000
Module marker for neutral	DEK 5/8-11.5 MC NE WS	500	1341630000
Thermotransfer version (Material: Polyester)	THM UR20 GE *1)	1	1429910000
Thermotransfer version (Material: Polyester)	THM UR20 WS *1)	1	1429420000
Paper version for Laserprinter	ESO UR20 DIN A4 WS *2)	10	1429430000
Replacement parts			
Electronics module	UR20-16DO-P-PLC-INT-SP	1	1346740000
Basic module	UR20-BM-SP	5	1350930000
Plug-in connector unit	UR20-PK-PLC-SP	5	1346590000
PLC interface element	RS 16IO 1W H S	1	9445700000
Note	*1) 1 roll = 1000 label = 1 Qty. *2) 1 sheet = 60 label = 1 Qty.		

Product standard	IEC 61131-2
EMC	EN 61000
ATEX	EN 60079
ATEXUL (in preparation)	UL 508

Let's connect.

4 RO-SSR

- 4 digital outputs
- Can be loaded up to 0.5 A per channel
- Solid-state relay

UR20-4RO-SSR-255

Technical data

System data	
Interface	u-remote system bus
Transmission rate of system bus	48 Mbit/s
Galvanic isolation	yes, DC 500 V between current paths
Supply	
Voltage supply	24 V DC +20 % / –15 % via the system bus
Current consumption (I_{IN} in power segment of field bus coupler), typ.	8 mA
Current consumption (I_{OUT} in the respective power segment)	< 15 mA
Digital outputs	
Number	4
Type	SSR /Triac
Switching frequency	up to 20 Hz
Response time, high	max. 100 ms
Response time, low	max. 100 ms
Output current per channel, max.	0.5 A
Output current per module, max.	2 A
Switching frequency max.	40 Hz
Short-circuit-proof	no
Nonreactiv	yes
Switching voltage max.	277 V AC *)
Module diagnosis	yes
Individual channel diagnosis	no
General data	
Weight	83 g
Dimensions (H/W/D)	120 mm (with catch lever128 mm) x 11,5 mm x 76 mm

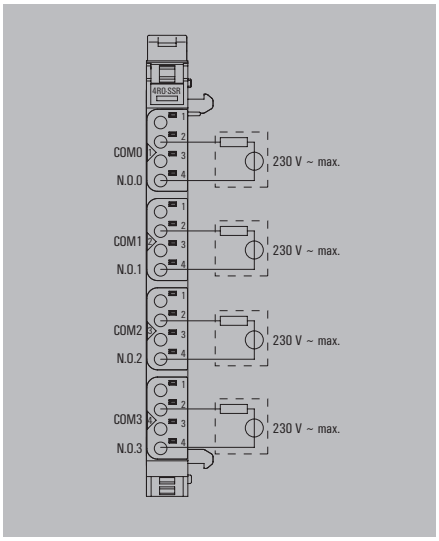

Ordering data

Module variants	Type	Qty.	Order No.
Digital output module, 4 channels, SSR	UR20-4RO-SSR-255	1	1315540000

*) For this and additional technical data, please refer to the manual available at www.weidmueller.de or scan the QR code below.

Accessories

	Type	Qty.	Order No.
Coding elements	KOSM BHZ5.00	100	1483050000
Termination kit	UR20-EBK-ACC	5	1346610000
Swivel marker	UR20-SM-ACC	20	1339920000
Connection marker for pusher custom printing	PM 2.7/2.6 MC SDR	192	1323700000
Connection marker for pusher neutral	PM 2.7/2.6 MC NE WS	960	1323710000
Module marker for custom printing	DEK 5/8-11.5 MC SDR	100	1341610000
Module marker for neutral	DEK 5/8-11.5 MC NE WS	500	1341630000
Thermotransfer version (Material: Polyester)	THM UR20 GE *1)	1	1429910000
Thermotransfer version (Material: Polyester)	THM UR20 WS *1)	1	1429420000
Paper version for Laserprinter	ESO UR20 DIN A4 WS *2)	10	1429430000
Replacement parts			
Electronics module	UR20-4RO-SSR-255-SP	1	1347130000
Basic module	UR20-BM-SP	5	1350930000
Plug-in connector unit	UR20-PK-255-SP	5	1346500000

Note

*1) 1 roll = 1000 label = 1 Qty.
*2) 1 sheet = 60 label = 1 Qty.

Product standard	IEC 61131-2
EMC	EN 61000
ATEX	EN 60079
ATEXUL (in preparation)	UL 508

Let's connect.

4 RO-CO

- 4 digital outputs
- Can be loaded up to 6 A per channel
- Relay output, Change-over contact
- Switching voltage 277 V AC/DC

UR20-4RO-CO-255

Technical data

System data	
Interface	u-remote system bus
Transmission rate of system bus	48 Mbit/s
Galvanic isolation	yes, DC 500 V between current paths
Supply	
Voltage supply	24 V DC +20 % / –15 % via the system bus
Current consumption (I_{IN} in power segment of field bus coupler), typ.	8 mA
Current consumption (I_{OUT} in the respective power segment)	< 15 mA
Digital outputs	
Number	4
Type	Change-over contact
Switching frequency	max. 5 Hz
Response time, high	20 ms
Response time, low	20 ms
Output current per channel, max.	5 A at 60 °C / 6 A at 55 °C
Output current per module, max.	20 A at 60 °C / 24 A at 55 °C
Switching frequency max.	5 Hz
Short-circuit-proof	no
Nonreactiv	yes
Switching voltage max.	277 V AC/DC *)
Module diagnosis	yes
Individual channel diagnosis	no
General data	
Weight	83 g
Dimensions (H/W/D)	120 mm (with catch lever128 mm) x 11,5 mm x 76 mm

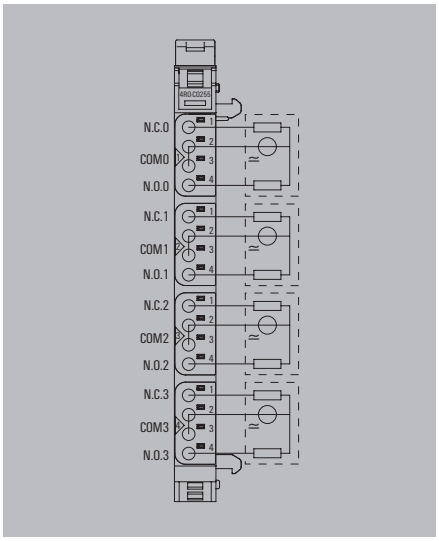

Ordering data

Module variants	Type	Qty.	Order No.
Digital output module, 4 channels, relay	UR20-4RO-CO-255	1	1315550000

*) For this and additional technical data, please refer to the manual available at www.weidmueller.de or scan the QR code below.

Accessories

	Type	Qty.	Order No.
Coding elements	KOSM BHZ5.00	100	1483050000
Termination kit	UR20-EBK-ACC	5	1346610000
Swivel marker	UR20-SM-ACC	20	1339920000
Connection marker for pusher custom printing	PM 2.7/2.6 MC SDR	192	1323700000
Connection marker for pusher neutral	PM 2.7/2.6 MC NE WS	960	1323710000
Module marker for custom printing	DEK 5/8-11.5 MC SDR	100	1341610000
Module marker for neutral	DEK 5/8-11.5 MC NE WS	500	1341630000
Thermotransfer version (Material: Polyester)	THM UR20 GE *1)	1	1429910000
Thermotransfer version (Material: Polyester)	THM UR20 WS *1)	1	1429420000
Paper version for Laserprinter	ESO UR20 DIN A4 WS *2)	10	1429430000
Replacement parts			
Electronics module	UR20-4RO-CO-255-SP	1	1347120000
Basic module	UR20-BM-SP	5	1350930000
Plug-in connector unit	UR20-PK-255-SP	5	1346500000

Note

*1) 1 roll = 1000 label = 1 Qty.
*2) 1 sheet = 60 label = 1 Qty.

Product standard	IEC 61131-2
EMC	EN 61000
ATEX	EN 60079
ATEXUL (in preparation)	UL 508

Let's connect.

Digital counter modules

100 kHz; 32 Bit Counter data width; Single channel diagnosis

In automated systems, it is impossible to imagine industry without the collection of incremental values.
Developed specifically for these applications Weidmüller now offers two counter modules that can take values with an input frequency of up to 100 kHz.
The 2CNT-100 module has two independent counter inputs and is supplemented by the module 1CNT-100-1DO with only one counter, but additional options. A Latch-, Gate- and Reset input allows external control of the counter. In addition, a digital output can trigger an immediate event, when there are compared values set.
The module electronics supply the connected sensors from the input current path (U_{IN}).

UR20-1CNT-100-1DO block diagram by way of example

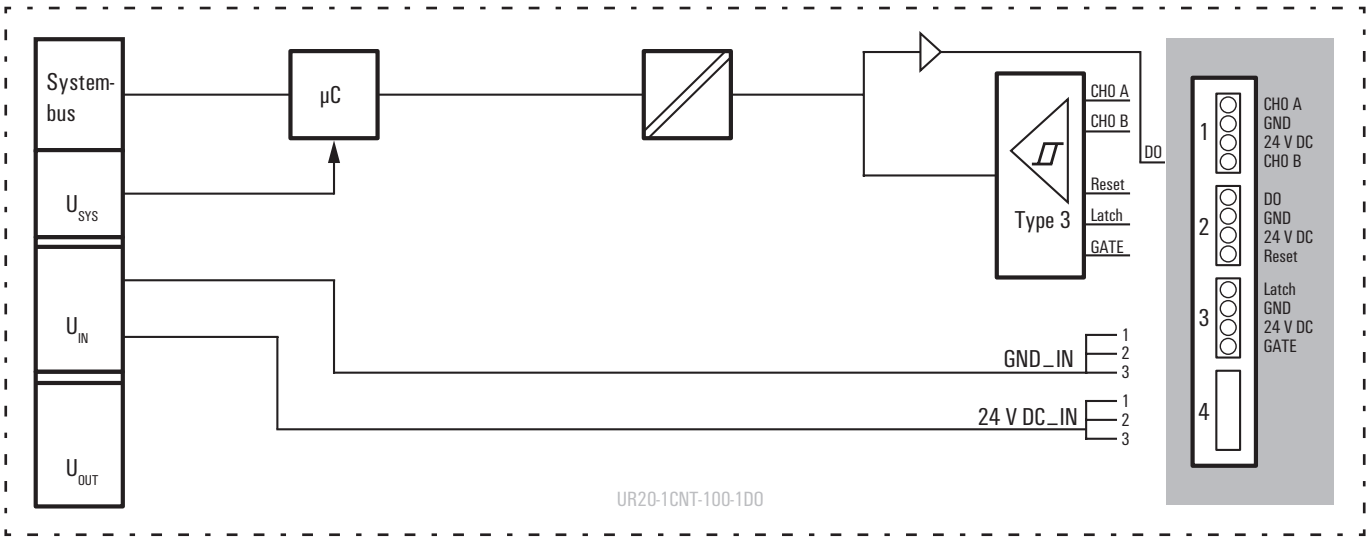

1CNT-100-1DO

- Latch-, Gate- and Reset input
- Counter data width 32 Bit
- Maximum input frequency 100 kHz
- Operation mode impuls, direction, 1-, 2- or 4-times
- Sensor feed
- Input filter adjustable up to 1 ms
- One digital output
- Hysteresis > 1 V

UR20-1CNT-100-1DO

Technical data

System data	
Interface	u-remote system bus
Transmission rate of system bus	48 Mbit/s
Galvanic isolation	yes, DC 500 V between current paths
Supply	
Voltage supply	24 V DC +20 % / –15 % via the system bus
Current consumption (I_{IN} in power segment of field bus coupler), typ.	8 mA
Current consumption (I_{IN} in the respective power segment)	35 mA
Digital Inputs	
Number of counter inputs	1
Type	incremental encoder
Input filter	adjustable up to 1 ms
Input voltage, low	< 5 V
Input voltage, high	> 11 V
Sensor feed	yes
Sensor connection	2- and 3-wire
Reverse polarity protection	yes
Modul diagnosis	yes
Single channel diagnosis	yes
Input current per channel, max.	3.5 mA
Counter data width	32 Bit
Input frequency, max.	100 kHz
Counter frequency, max.	400 kHz
Latch-, Gate-, Reset-input	yes
Operation mode	Impulse / direction / 1-, 2-, 4-times
General data	
Weight	87 g
Dimensions (H/W/D)	120 mm (with catch lever 128 mm) x 11.5 mm x 76 mm

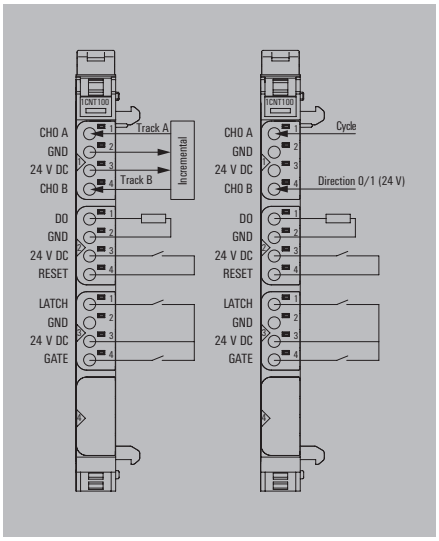

Ordering data

Module variants	Type	Qty.	Order No.
Digital counter module, 1 channel, 100 kHz	UR20-1CNT-100-1DO	1	1315570000

Accessories

	Type	Qty.	Order No.
Coding elements	KOSM BHZ5.00	100	1483050000
Termination kit	UR20-EBK-ACC	5	1346610000
Swivel marker	UR20-SM-ACC	20	1339920000
Connection marker for pusher custom printing	PM 2.7/2.6 MC SDR	192	1323700000
Connection marker for pusher neutral	PM 2.7/2.6 MC NE WS	960	1323710000
Module marker for custom printing	DEK 5/8-11.5 MC SDR	100	1341610000
Module marker for neutral	DEK 5/8-11.5 MC NE WS	500	1341630000
Thermotransfer version (Material: Polyester)	THM UR20 GE *1)	1	1429910000
Thermotransfer version (Material: Polyester)	THM UR20 WS *1)	1	1429420000
Paper version for Laserprinter	ESO UR20 DIN A4 WS *2)	10	1429430000
Replacement parts			
Electronics module	UR20-1CNT-100-1DO-SP	1	1347140000
Basic module	UR20-BM-SP	5	1350930000
Plug-in connector unit	UR20-PK-1CNT-1DO-SP	5	1346520000
Note	*1) 1 roll = 1000 label = 1 Qty. *2) 1 sheet = 60 label = 1 Qty.		

Product standard	IEC 61131-2
EMC	EN 61000
ATEX	EN 60079
ATEXUL (in preparation)	UL 508

Let's connect.

2CNT-100

- Counter data width 32 Bit
- Maximum input frequency 100 kHz
- Operation mode impuls, direction, 1-, 2- or 4-times
- Sensor feed
- Input filter adjustable up to 1 ms
- Hysteresis > 1 V

UR20-2CNT-100

Technical data

System data	
Interface	u-remote system bus
Transmission rate of system bus	48 Mbit/s
Galvanic isolation	yes, DC 500 V between current paths
Supply	
Voltage supply	24 V DC +20 % / - 15 % via the system bus
Current consumption (I_{IN} in power segment of field bus coupler), typ.	8 mA
Current consumption (I_{IN} in the respective power segment)	35 mA
Digital Inputs	
Number of counter inputs	2
Type	incremental encoder
Input filter	adjustable up to 1 ms
Input voltage, low	< 5 V
Input voltage, high	> 11 V
Sensor feed	yes
Sensor connection	2- and 3-wire
Reverse polarity protection	yes
Modul diagnosis	yes
Single channel diagnosis	yes
Input current per channel, max.	3 mA
Counter data width	32 Bit
Input frequency, max.	100 kHz
Counter frequency, max.	400 kHz
Operation mode	Impulse / direction / 1-, 2-, 4-times
General data	
Weight	87 g
Dimensions (H/W/D)	120 mm (with catch lever 128 mm) x 11.5 mm x 76 mm

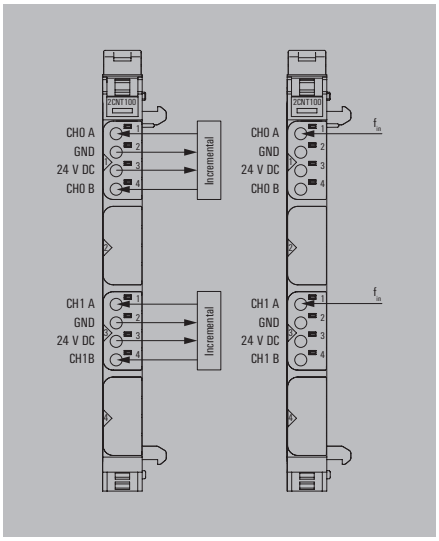

Ordering data

Module variants	Type	Qty.	Order No.
Digital counter module, 2 channel, 100 kHz	UR20-2CNT-100	1	1315590000

Accessories

	Type	Qty.	Order No.
Coding elements	KOSM BHZ5.00	100	1483050000
Termination kit	UR20-EBK-ACC	5	1346610000
Swivel marker	UR20-SM-ACC	20	1339920000
Connection marker for pusher custom printing	PM 2.7/2.6 MC SDR	192	1323700000
Connection marker for pusher neutral	PM 2.7/2.6 MC NE WS	960	1323710000
Module marker for custom printing	DEK 5/8-11.5 MC SDR	100	1341610000
Module marker for neutral	DEK 5/8-11.5 MC NE WS	500	1341630000
Thermotransfer version (Material: Polyester)	THM UR20 GE *1)	1	1429910000
Thermotransfer version (Material: Polyester)	THM UR20 WS *1)	1	1429420000
Paper version for Laserprinter	ESO UR20 DIN A4 WS *2)	10	1429430000
Replacement parts			
Electronics module	UR20-2CNT-100-SP	1	1347150000
Basic module	UR20-BM-SP	5	1350930000
Plug-in connector unit	UR20-PK-2CNT-SP	5	1346540000
Note	*1) 1 roll = 1000 label = 1 Qty. *2) 1 sheet = 60 label = 1 Qty.		

Product standard	IEC 61131-2
EMC	EN 61000
ATEX	EN 60079
ATEXUL (in preparation)	UL 508

Let's connect.

Pulse width modulation modules

Frequency can be adjusted up to 40 kHz; short-circuit-proof; two PWM outputs

As part of the new u-remote system, Weidmüller provides a specialised solution for controlling small motors with current requirements of 0.5 A to 2 A which can also be used to control valve flaps. Here not only can the switching frequencies be set up to 40 kHz, the push/pull output levels can also be used for motor activation, for example, to change direction of rotation. As with all modules in the u-remote system, the characteristics are outstanding – from the modular design and interchangeable electronics to the removable and plug-in terminal strip.

The module electronics supply the connected actuators from the output current path (U_{OUT}).

UR20-2PWM-PN-0.5A block diagram by way of example

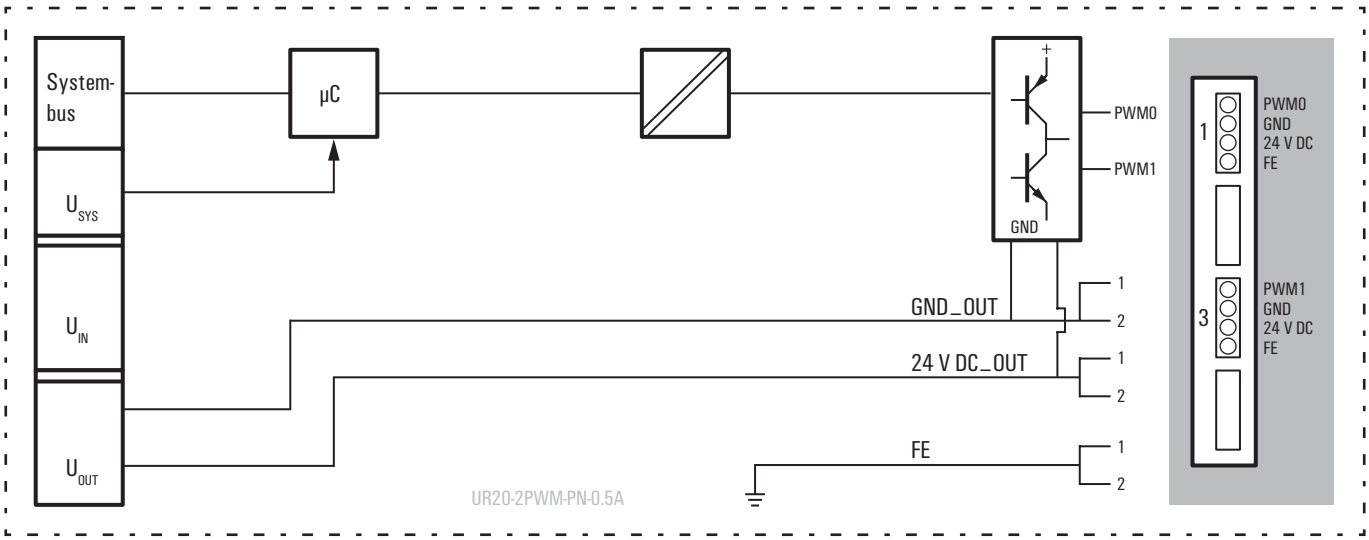

2 PWM-PN-0.5A

- 2 pulse width modulation module outputs
- Can be loaded up to 0.5 A per channel
- Short-circuit-proof
- Push/pull output
- Maximum 40 kHz output frequency (adjustable)

UR20-2PWM-PN-0.5A

Technical data

System data	
Interface	u-remote system bus
Transmission rate of system bus	48 Mbit/s
Galvanic isolation	yes, DC 500 V between current paths
Supply	
Voltage supply	24 V DC +20 % / –15 % via the system bus
Current consumption (internal)	40 mA (Output path)
Digital outputs	
Number	2
Type	PWM push/pull output stage
Resolution	32 Bit
Accuracy	1 Bit
Response time, high	< 100 ns
Response time, low	< 100 ns
Output current per channel, max.	0.5 A
Output current per module, max.	1 A
Switching frequency max.	
Resistive load (min. 47 Ω)	static, 6 Hz to 40 kHz
Inductive load (DC 13)	static, 6 Hz to 40 kHz
Lamp load (12 W)	static, 6 Hz to 40 kHz
Actuator connection	yes
Short-circuit-proof	yes
Module diagnosis	yes
Individual channel diagnosis	no
Nonreactiv	yes
Pulse duty factor	0 - 100 % push/pull or push parameterisable
General data	
Weight	77 g
Dimensions (H/W/D)	120 mm (with catch lever128 mm) x 11,5 mm x 76 mm

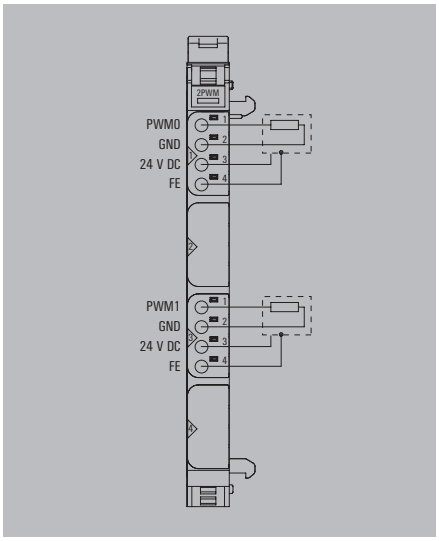

Ordering data

Module variants	Type	Qty.	Order No.
Digital output module, PWM, 2 channels, 0.5 A	UR20-2PWM-PN-0.5A	1	1315600000

Accessories

	Type	Qty.	Order No.
Coding elements	KOSM BHZ5.00	100	1483050000
Termination kit	UR20-EBK-ACC	5	1346610000
Swivel marker	UR20-SM-ACC	20	1339920000
Connection marker for pusher custom printing	PM 2.7/2.6 MC SDR	192	1323700000
Connection marker for pusher neutral	PM 2.7/2.6 MC NE WS	960	1323710000
Module marker for custom printing	DEK 5/8-11.5 MC SDR	100	1341610000
Module marker for neutral	DEK 5/8-11.5 MC NE WS	500	1341630000
Thermotransfer version (Material: Polyester)	THM UR20 GE *1)	1	1429910000
Thermotransfer version (Material: Polyester)	THM UR20 WS *1)	1	1429420000
Paper version for Laserprinter	ESO UR20 DIN A4 WS *2)	10	1429430000
Replacement parts			
Electronics module	UR20-2PWM-05A-SP	1	1347180000
Basic module	UR20-BM-SP	5	1350930000
Plug-in connector unit	UR20-PK-PWM-SP	5	1346550000
Note	*1) 1 roll = 1000 label = 1 Qty. *2) 1 sheet = 60 label = 1 Qty.		

Product standard	IEC 61131-2
EMC	EN 61000
ATEX	EN 60079
ATEXUL (in preparation)	UL 508

Let's connect.

2 PWM-PN-2A

- 2 pulse width modulation module outputs
- Can be loaded up to 2 A per channel
- Short-circuit-proof
- Push/pull output
- Maximum 40 kHz output frequency (adjustable)

UR20-2PWM-PN-2A

Technical data

System data	
Interface	u-remote system bus
Transmission rate of system bus	48 Mbit/s
Galvanic isolation	yes, DC 500 V between current paths
Supply	
Voltage supply	24 V DC +20 % / –15 % via the system bus
Current consumption (internal)	40 mA (Output path)
Digital outputs	
Number	2
Type	PWM push/pull output stage
Resolution	32 Bit
Accuracy	1 Bit
Response time, high	< 100 ns
Response time, low	< 100 ns
Output current per channel, max.	2 A
Output current per module, max.	4 A
Switching frequency max.	
Resistive load (min. 47 Ω)	static, 6 Hz to 40 kHz
Inductive load (DC 13)	static, 6 Hz to 40 kHz
Lamp load (12 W)	static, 6 Hz to 40 kHz
Actuator connection	yes
Short-circuit-proof	yes
Module diagnosis	yes
Individual channel diagnosis	no
Nonreactiv	yes
Pulse duty factor	0 - 100 % push/pull or push parameterisable
General data	
Weight	82 g
Dimensions (H/W/D)	120 mm (with catch lever128 mm) x 11,5 mm x 76 mm

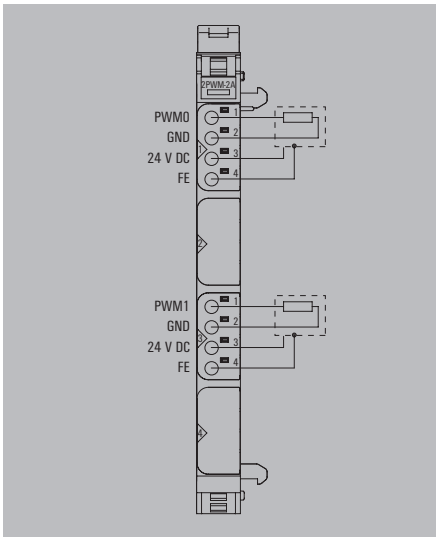

Ordering data

Module variants	Type	Qty.	Order No.
Digital output module, PWM, 2 channels, 2 A	UR20-2PWM-PN-2A	1	1315610000

Accessories

	Type	Qty.	Order No.
Coding elements	KOSM BHZ5.00	100	1483050000
Termination kit	UR20-EBK-ACC	5	1346610000
Swivel marker	UR20-SM-ACC	20	1339920000
Connection marker for pusher custom printing	PM 2.7/2.6 MC SDR	192	1323700000
Connection marker for pusher neutral	PM 2.7/2.6 MC NE WS	960	1323710000
Module marker for custom printing	DEK 5/8-11.5 MC SDR	100	1341610000
Module marker for neutral	DEK 5/8-11.5 MC NE WS	500	1341630000
Thermotransfer version (Material: Polyester)	THM UR20 GE *1)	1	1429910000
Thermotransfer version (Material: Polyester)	THM UR20 WS *1)	1	1429420000
Paper version for Laserprinter	ESO UR20 DIN A4 WS *2)	10	1429430000
Replacement parts			
Electronics module	UR20-2PWM-2A-SP	1	1347190000
Basic module	UR20-BM-SP	5	1350930000
Plug-in connector unit	UR20-PK-PWM-SP	5	1346550000
Note	*1) 1 roll = 1000 label = 1 Qty. *2) 1 sheet = 60 label = 1 Qty.		

Product standard	IEC 61131-2
EMC	EN 61000
ATEX	EN 60079
ATEXUL (in preparation)	UL 508

Let's connect.

Analogue input modules

Input parameters can be set for current or voltage; up to 3-wire+FE; Accuracy 0.1% FSR

Analogue input modules of the u-remote system are available in many variants with different resolutions and wiring solutions.
Variants are available in a 12- and 16-bit resolution, which record up to 4 analogue sensors with +/-10 V, +/-5 V, 0...10 V, 0...5 V, 2...10 V, 1...5 V, 0...20 mA or 4...20 mA with maximum accuracy. Each plug-in connector has options for connecting sensors with 2-wire, 3-wire and 3-wire+FE technology. The parameters for the measurement range can be individually set for each channel. A separate status LED is also assigned to each channel.
A special variant for Weidmüller interface units enables current measurements with a 16-bit resolution at maximum accuracy for 8 sensors at a time (0...20 mA or 4...20 mA).

The module electronics supply the connected sensors from the input current path (U_{IN}).

UR20-4AI-UI-16 block diagram by way of example

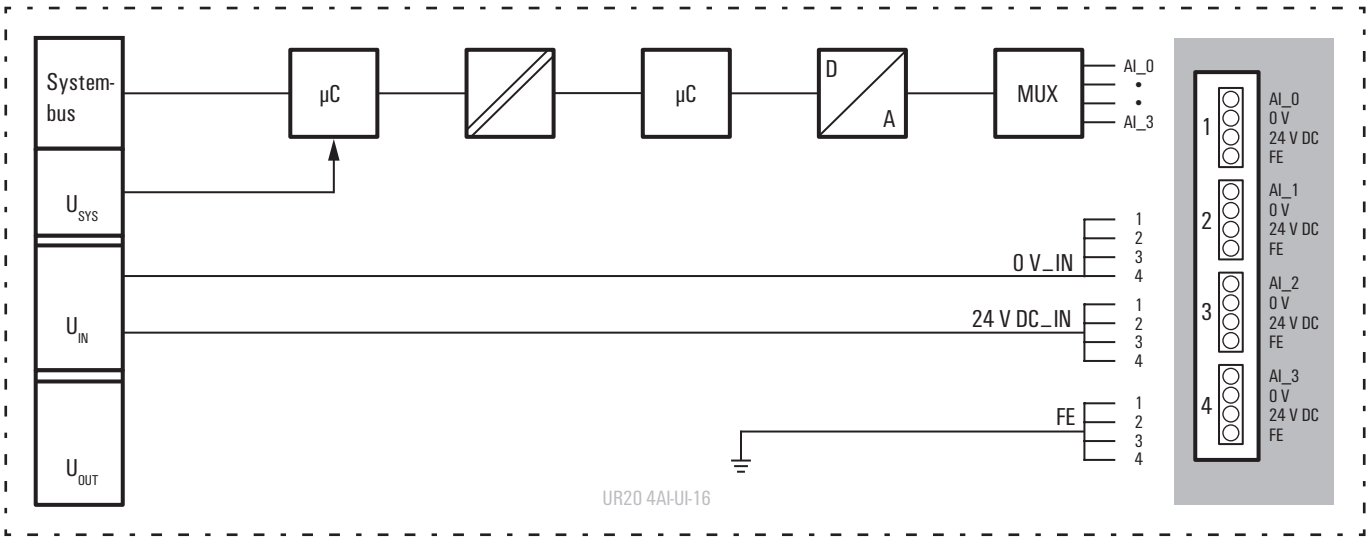

4 AI-UI-16

- 4 analogue inputs
- Parameterisable inputs (voltage, current)
- 16-bit resolution
- 2-wire, 3-wire and 3-wire+FE connection
- Accuracy 0.1 % FSR

UR20-4AI-UI-16

Technical data

System data	
Interface	u-remote system bus
Transmission rate of system bus	48 Mbit/s
Galvanic isolation	yes, DC 500 V between current paths
Supply	
Voltage supply	24 V DC +20 % / –15 % via the system bus
Current consumption (I_{IN} in power segment of field bus coupler), typ.	8 mA
Current consumption (I_{IN} in the respective power segment)	25 mA + sensor feed
Analogue inputs	
Number	4
Input	1. Voltage (0...5 V, ±5 V, 0...10 V, ±10 V, 1...5 V, 2...10 V) 2. Current (0...20 mA, 4...20 mA)
Resolution	16 Bit
Accuracy	0.1 % FSR
Sensor supply	24 V
Sensor connection	2-wire, 3-wire, 3-wire+FE
Conversion time	1 ms
Internal resistance U	100 kΩ
Internal resistance I	41.2 Ω
Reverse polarity protection	yes
Module diagnosis	yes
Individual channel diagnosis	no
Short-circuit-proof	yes
Tripping and dropout time	< 50 ms
General data	
Weight	89 g
Dimensions (H/W/D)	120 mm (with catch lever128 mm) x 11,5 mm x 76 mm

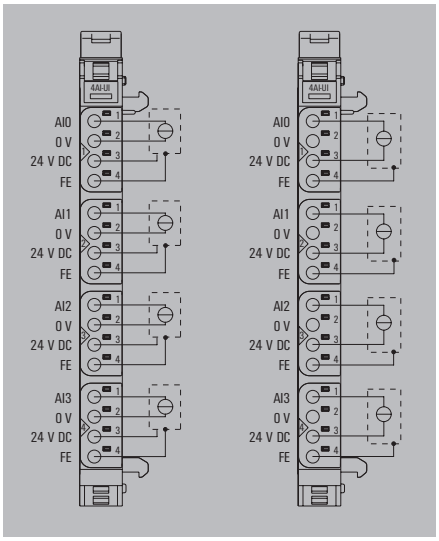

Ordering data

Module variants	Type	Qty.	Order No.
Analogue input module, 4 channels, 16 bits	UR20-4AI-UI-16	1	1315620000

Accessories

	Type	Qty.	Order No.
Coding elements	KOSM BHZ5.00	100	1483050000
Termination kit	UR20-EBK-ACC	5	1346610000
Swivel marker	UR20-SM-ACC	20	1339920000
Connection marker for pusher custom printing	PM 2.7/2.6 MC SDR	192	1323700000
Connection marker for pusher neutral	PM 2.7/2.6 MC NE WS	960	1323710000
Module marker for custom printing	DEK 5/8-11.5 MC SDR	100	1341610000
Module marker for neutral	DEK 5/8-11.5 MC NE WS	500	1341630000
Thermotransfer version (Material: Polyester)	THM UR20 GE *1)	1	1429910000
Thermotransfer version (Material: Polyester)	THM UR20 WS *1)	1	1429420000
Paper version for Laserprinter	ESO UR20 DIN A4 WS *2)	10	1429430000
Replacement parts			
Electronics module	UR20-4AI-UI-16-SP	1	1347200000
Basic module	UR20-BM-SP	5	1350930000
Plug-in connector unit	UR20-PK-4W-SP	5	1346440000
Note	*1) 1 roll = 1000 label = 1 Qty. *2) 1 sheet = 60 label = 1 Qty.		

Product standard	IEC 61131-2
EMC	EN 61000
ATEX	EN 60079
ATEXUL (in preparation)	UL 508

Let's connect.

4 AI-UI-12

- 4 analogue inputs
- Parameterisable inputs (voltage, current)
- 12-bit resolution
- 2-wire, 3-wire and 3-wire+FE connection
- Accuracy 0.25 % FSR

UR20-4AI-UI-12

Technical data

System data	
Interface	u-remote system bus
Transmission rate of system bus	48 Mbit/s
Galvanic isolation	yes, DC 500 V between current paths
Supply	
Voltage supply	24 V DC +20 % / –15 % via the system bus
Current consumption (I_{IN} in power segment of field bus coupler), typ.	8 mA
Current consumption (I_{IN} in the respective power segment)	25 mA + sensor feed
Analogue inputs	
Number	4
Inpur	1. Voltage (0...5 V, ±5 V, 0...10 V, ±10 V, 1...5 V, 2...10 V) 2. Current (0...20 mA, 4...20 mA)
Resolution	12 Bit
Accuracy	0,25 % FSR
Sensor supply	24 V
Sensor connection	2-wire, 3-wire, 3-wire+FE
Conversion time	1 ms
Internal resistance U	100 kΩ
Internal resistance I	41.2 Ω
Reverse polarity protection	yes
Module diagnosis	yes
Individual channel diagnosis	no
Short-circuit-proof	yes
Tripping and dropout time	< 50 ms
General data	
Weight	87 g
Dimensions (H/W/D)	120 mm (with catch lever128 mm) x 11,5 mm x 76 mm

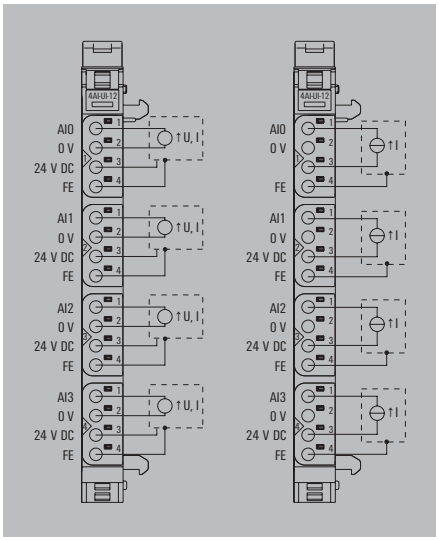

Ordering data

Module variants	Type	Qty.	Order No.
Analogue input module, 4 channels, 12 bits	UR20-4AI-UI-12	1	1394390000

Accessories

	Type	Qty.	Order No.
Coding elements	KOSM BHZ5.00	100	1483050000
Termination kit	UR20-EBK-ACC	5	1346610000
Swivel marker	UR20-SM-ACC	20	1339920000
Connection marker for pusher custom printing	PM 2.7/2.6 MC SDR	192	1323700000
Connection marker for pusher neutral	PM 2.7/2.6 MC NE WS	960	1323710000
Module marker for custom printing	DEK 5/8-11.5 MC SDR	100	1341610000
Module marker for neutral	DEK 5/8-11.5 MC NE WS	500	1341630000
Thermotransfer version (Material: Polyester)	THM UR20 GE *1)	1	1429910000
Thermotransfer version (Material: Polyester)	THM UR20 WS *1)	1	1429420000
Paper version for Laserprinter	ESO UR20 DIN A4 WS *2)	10	1429430000
Replacement parts			
Electronics module	UR20-4AI-UI-12-SP	1	1434230000
Basic module	UR20-BM-SP	5	1350930000
Plug-in connector unit	UR20-PK-4W-SP	5	1346440000
Note	*1) 1 roll = 1000 label = 1 Qty. *2) 1 sheet = 60 label = 1 Qty.		

Product standard	IEC 61131-2
EMC	EN 61000
ATEX	EN 60079
ATEXUL (in preparation)	UL 508

Let's connect.

8 AI-I-PLC

- 8 analogue inputs
- Rapid cabling with flat ribbon cable
- 0/4 to 20 mA with 0.1 % accuracy with a 16-bit resolution
- Inputs can be parameterised (passive or active operating mode)

UR20-8AI-I-PLC-INT

Technical data

System data	
Interface	u-remote system bus
Transmission rate of system bus	48 Mbit/s
Galvanic isolation	yes, DC 500 V between current paths
Supply	
Voltage supply	24 V DC +20 % / –15 % via the system bus
Current consumption (I_{IN} in power segment of field bus coupler), typ.	8 mA
Current consumption (I_{IN} external)	20 mA
Analogue inputs	
Number	8
Inpur	Current input
Resolution	16 Bit
Accuracy	0.1 % FSR
Sensor supply	external
Sensor connection	PLC interface
Conversion time	1 ms
Internal resistance I	approx. 50 Ω
Reverse polarity protection	yes
Module diagnosis	yes
Individual channel diagnosis	no
Short-circuit-proof	yes
Tripping time	< 0,1 s
General data	
Weight	73 g
Dimensions (H/W/D)	120 mm (with catch lever128 mm) x 11,5 mm x 76 mm

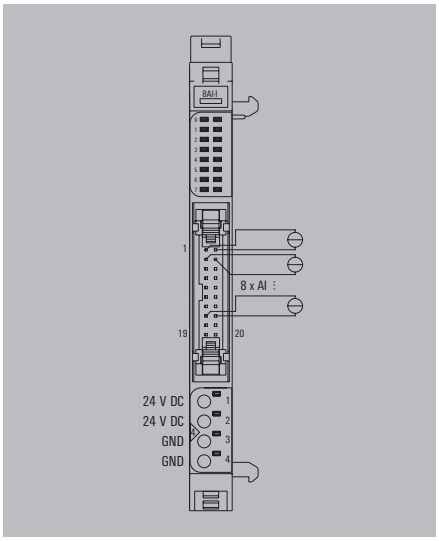

Ordering data

Module variants	Type	Qty.	Order No.
Analogue input module, 8 channels, PLC interface	UR20-8AI-I-PLC-INT	1	1315670000

Accessories

	Type	Qty.	Order No.
Coding elements	KOSM BHZ5.00	100	1483050000
Termination kit	UR20-EBK-ACC	5	1346610000
Swivel marker	UR20-SM-ACC	20	1339920000
Connection marker for pusher custom printing	PM 2.7/2.6 MC SDR	192	1323700000
Connection marker for pusher neutral	PM 2.7/2.6 MC NE WS	960	1323710000
Module marker for custom printing	DEK 5/8-11.5 MC SDR	100	1341610000
Module marker for neutral	DEK 5/8-11.5 MC NE WS	500	1341630000
Thermotransfer version (Material: Polyester)	THM UR20 GE *1)	1	1429910000
Thermotransfer version (Material: Polyester)	THM UR20 WS *1)	1	1429420000
Paper version for Laserprinter	ESO UR20 DIN A4 WS *2)	10	1429430000
Replacement parts			
Electronics module	UR20-8AI-I-PLC-INT-SP	1	1347250000
Basic module	UR20-BM-SP	5	1350930000
Plug-in connector unit	UR20-PK-PLC-SP	5	1346590000
PLC interface element	RS F20 LP2N 5/20	1	0224261001
Note	*1) 1 roll = 1000 label = 1 Qty. *2) 1 sheet = 60 label = 1 Qty.		

Product standard	IEC 61131-2
EMC	EN 61000
ATEX	EN 60079
ATEXUL (in preparation)	UL 508

Let's connect.

Temperature modules

Available for TC and RTD; 16-bit resolution; 50/60 Hz suppression

The recording of resistance temperature and thermocoupler sensors is indispensable for many applications. The 4-channel input modules from Weidmüller are designed for all common thermal elements and resistance temperature sensors. With an accuracy of 0.2 % of the measurement range end value and a resolution of 16 bits, cable breaks and instances of the limit value being exceeded or fallen below are detected by means of individual channel diagnosis. Additional features such as an automatic 50-Hz to 60-Hz suppression or external as well as internal cold-junction compensation, as are available with the TC module, round off the scope of function.

The module electronics supply the connected sensors from the input current path (U_{IN}).

UR20-4AI-TC-DIAG block diagram by way of example

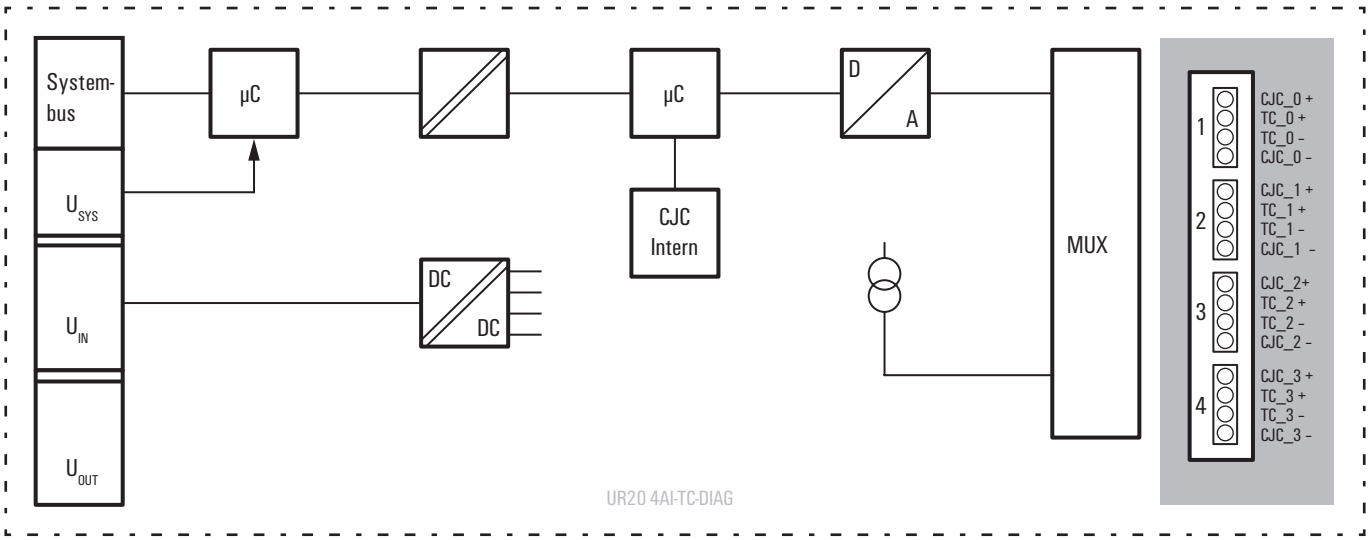

4 AI-TC

- 4 analogue inputs
- Various TC sensors
- High accuracy of 0.2 % FSR
- 16-bit resolution
- Individual channel diagnosis
- Internal or external cold-junction compensation possible
- Automatic 50 and 60 Hz suppression

UR20-4AI-TC-DIAG

Technical data

System data	
Interface	u-remote system bus
Transmission rate of system bus	48 Mbit/s
Galvanic isolation	yes, DC 500 V between current paths
Supply	
Voltage supply	24 V DC +20 % / –15 % via the system bus
Current consumption (I_{IN} in power segment of field bus coupler), typ.	8 mA
Current consumption (I_{IN} in the respective power segment)	20 mA
Analogue inputs	
Number	4
Sensor type	J, K, T, B, N, E, R, S, L, U, C, mV
Resolution	16 Bit
Accuracy	0.2 % FSR
Sensor connection	2-wire
Cold-junction compensation	internal and external (int. accuracy ≤ 3 K)
Temperature coefficient	50 ppm/K
Temperature range	–200...+2315 °C
Conversion time	36...240 ms, adjustable
Internal resistance	> 1 MΩ
Module diagnosis	yes
Individual channel diagnosis	yes
Reverse polarity protection	yes
General data	
Weight	86 g
Dimensions (H/W/D)	120 mm (with catch lever128 mm) x 11,5 mm x 76 mm

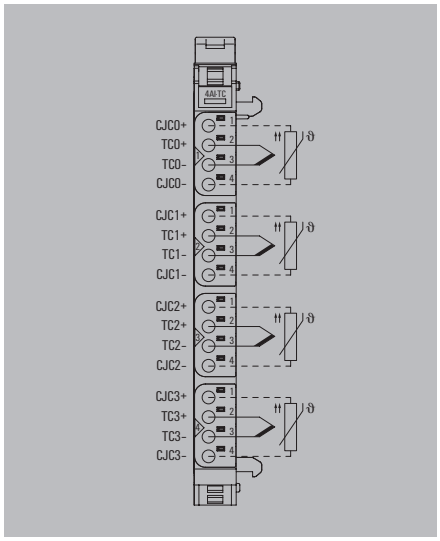

Ordering data

Module variants	Type	Qty.	Order No.
Analogue input module, 4 channels, thermocouple	UR20-4AI-TC-DIAG	1	1315710000

Accessories

	Type	Qty.	Order No.
Coding elements	KOSM BHZ5.00	100	1483050000
Termination kit	UR20-EBK-ACC	5	1346610000
Swivel marker	UR20-SM-ACC	20	1339920000
Connection marker for pusher custom printing	PM 2.7/2.6 MC SDR	192	1323700000
Connection marker for pusher neutral	PM 2.7/2.6 MC NE WS	960	1323710000
Module marker for custom printing	DEK 5/8-11.5 MC SDR	100	1341610000
Module marker for neutral	DEK 5/8-11.5 MC NE WS	500	1341630000
Thermotransfer version (Material: Polyester)	THM UR20 GE *1)	1	1429910000
Thermotransfer version (Material: Polyester)	THM UR20 WS *1)	1	1429420000
Paper version for Laserprinter	ESO UR20 DIN A4 WS *2)	10	1429430000
Replacement parts			
Electronics module	UR20-4AI-TC-DIAG-SP	1	1435740000
Basic module	UR20-BM-SP	5	1350930000
Plug-in connector unit	UR20-PK-4W-SP	5	1346440000
Note	*1) 1 roll = 1000 label = 1 Qty. *2) 1 sheet = 60 label = 1 Qty.		

Product standard	IEC 61131-2
EMC	EN 61000
ATEX	EN 60079
ATEXUL (in preparation)	UL 508

Let's connect.

4 AI-RTD

- 16-bit resolution
- Individual channel diagnosis
- Automatic 50 and 60 Hz suppression
- For 2-, 3- and 4-wire RTDs
- High accuracy
- For virtually all common sensors
- Temperature measurement via resistor

UR20-4AI-RTD-DIAG

Technical data

System data	
Interface	u-remote system bus
Transmission rate of system bus	48 Mbit/s
Galvanic isolation	yes, DC 500 V between current paths
Supply	
Voltage supply	24 V DC +20 % / –15 % via the system bus
Current consumption (I_{IN} in power segment of field bus coupler), typ.	8 mA
Current consumption (I_{IN} in the respective power segment)	20 mA
Analogue inputs	
Number	4
Sensor type	Pt100, Pt200, Pt500, Pt1000, Ni100, Ni120, Ni200, Ni500, Ni1000, Cu10, resistors with 40 Ω, 80 Ω, 150 Ω, 300 Ω, 500 Ω, 1 kΩ, 2 kΩ, 4 kΩ
Resolution	16 Bit
Accuracy	0.2 % FSR, 0.3 % FSR for Ni sensors, 0.6 % FSR for Cu10
Sensor connection	2-wire, 3-wire, 4-wire
Temperature coefficient	50 ppm/K
Temperature range	-200...+850 °C
Conversion time	36...240 ms adjustable
Internal resistance	> 1 MΩ
Reverse polarity protection	yes
Module diagnosis	yes
Individual channel diagnosis	yes
General data	
Weight	91 g
Dimensions (H/W/D)	120 mm (with catch lever128 mm) x 11,5 mm x 76 mm

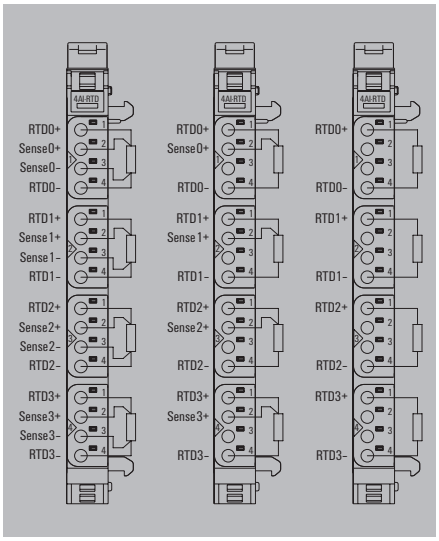

Ordering data

Module variants	Type	Qty.	Order No.
Analogue input module, 4 channels, RTD	UR20-4AI-RTD-DIAG	1	1315700000

Accessories

	Type	Qty.	Order No.
Coding elements	KOSM BHZ5.00	100	1483050000
Termination kit	UR20-EBK-ACC	5	1346610000
Swivel marker	UR20-SM-ACC	20	1339920000
Connection marker for pusher custom printing	PM 2.7/2.6 MC SDR	192	1323700000
Connection marker for pusher neutral	PM 2.7/2.6 MC NE WS	960	1323710000
Module marker for custom printing	DEK 5/8-11.5 MC SDR	100	1341610000
Module marker for neutral	DEK 5/8-11.5 MC NE WS	500	1341630000
Thermotransfer version (Material: Polyester)	THM UR20 GE *1)	1	1429910000
Thermotransfer version (Material: Polyester)	THM UR20 WS *1)	1	1429420000
Paper version for Laserprinter	ESO UR20 DIN A4 WS *2)	10	1429430000
Replacement parts			
Electronics module	UR20-4AI-RTD-DIAG-SP	1	1347290000
Basic module	UR20-BM-SP	5	1350930000
Plug-in connector unit	UR20-PK-4W-SP	5	1346440000
Note	*1) 1 roll = 1000 label = 1 Qty. *2) 1 sheet = 60 label = 1 Qty.		

Product standard	IEC 61131-2
EMC	EN 61000
ATEX	EN 60079
ATEXUL (in preparation)	UL 508

Let's connect.

Analogue output module

2- or 4-wire connection; 16-bit resolution; 4 outputs

The analogue output module controls up to 4 analogue actuators with +/-10 V, +/-5 V, 0...10 V, 0...5 V, 2...10 V, 1...5 V, 0...20 mA or 4...20 mA with an accuracy of 0.05 % of the measurement range end value. An actuator with 2- or 4-wire technology can be connected to each plug-in connector. The outputs are defined channel by channel using parameterisation. A separate status LED is assigned to each channel.

The outputs are supplied from the output current path (U_{OUT}).

Block diagram UR20-4AO-UI-16

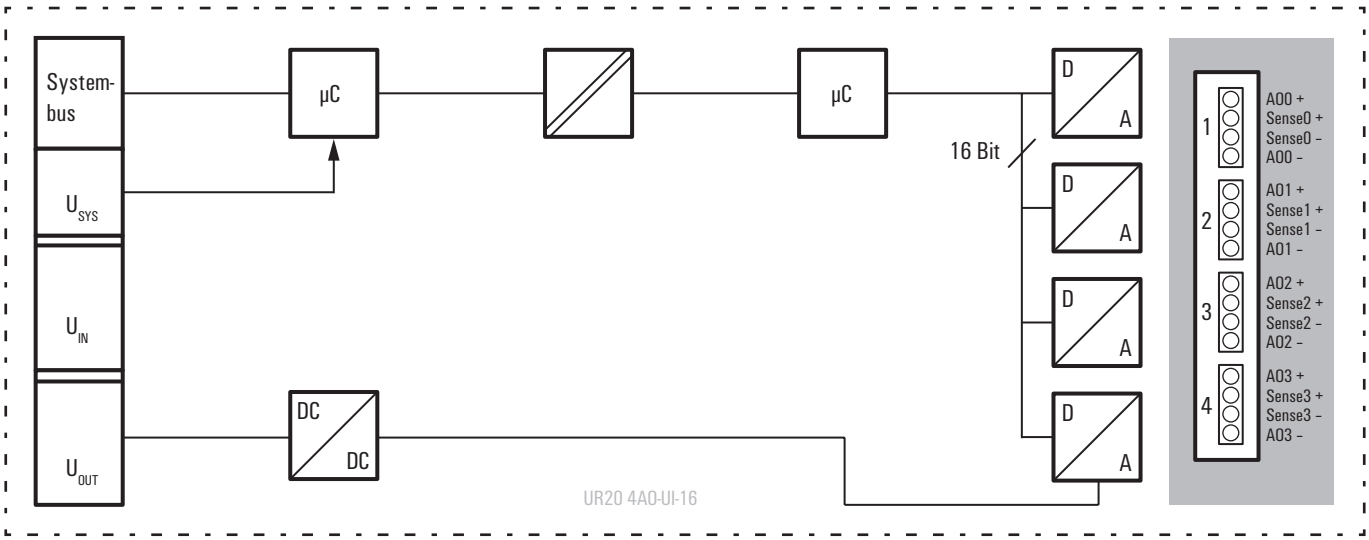

4 AO

- 4 analogue outputs
- Outputs can be parameterised by channel (voltage, current)
- 16-bit resolution
- 2- and 4-wire connection
- Accuracy typ. 0.05 % FSR
- Replacement values can be set per channel
- Nonreactiv
- Short-circuit-proof

UR20-4AO-UI-16

Technical data

System data	
Interface	u-remote system bus
Transmission rate of system bus	48 Mbit/s
Galvanic isolation	yes, DC 500 V between current paths
Supply	
Voltage supply	24 V DC +20 % / –15 % via the system bus
Current consumption (I_{IN} in power segment of field bus coupler), typ.	8 mA
Current consumption (I_{OUT} in the respective power segment)	85 mA
Analogue outputs	
Number	4
Output	1. Voltage (0...5 V, 0...10 V, 1...5 V, 2...10 V, ±5 V) 2. Current (0...20 mA or 4...20 mA)
Response time	1 ms for 4 channels
Resolution	16 Bit
Accuracy	±0.1 % FSR max., 0.05 % FSR typ.
Load resistance, voltage output	> 1 kΩ (at > 50 °C ambient temperature max. sum of sensor current = 25 mA)
Load resistance, current output	< 600 Ω
Actuator connection	2-wire (current and voltage), 3- and 4-wire (voltage), (2-wire: automatic detection)
Temperature coefficient	20 ppm Voltage / 31 ppm current measurement / °K
Max. error between T min. and T max.	220 ppm FSR
Monotonicity	yes
Crosstalk between the channels	0,001 % FSR
Repeat accuracy	< 1 mV effectively
Output waviness	max. 0.001 %
Module diagnosis	yes
Replacement values	yes
General data	
Weight	83 g
Dimensions (H/W/D)	120 mm (with catch lever128 mm) x 11,5 mm x 76 mm

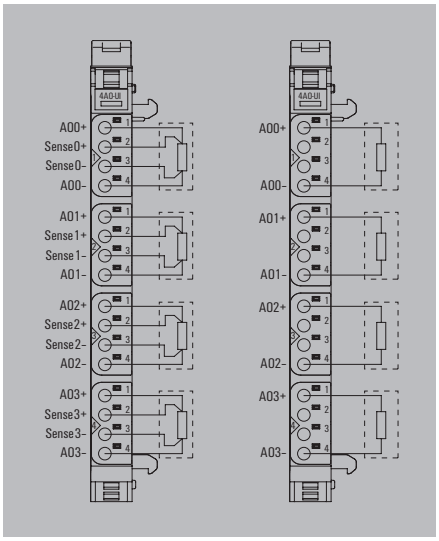

Ordering data

Module variants	Type	Qty.	Order No.
Analogue output module, 4 channels, 16 Bit	UR20-4AO-UI-16	1	**1315680000**

Accessories

	Type	Qty.	Order No.
Coding elements	KOSM BHZ5.00	100	**1483050000**
Termination kit	UR20-EBK-ACC	5	**1346610000**
Swivel marker	UR20-SM-ACC	20	**1339920000**
Connection marker for pusher custom printing	PM 2.7/2.6 MC SDR	192	**1323700000**
Connection marker for pusher neutral	PM 2.7/2.6 MC NE WS	960	**1323710000**
Module marker for custom printing	DEK 5/8-11.5 MC SDR	100	**1341610000**
Module marker for neutral	DEK 5/8-11.5 MC NE WS	500	**1341630000**
Thermotransfer version (Material: Polyester)	THM UR20 GE *1)	1	**1429910000**
Thermotransfer version (Material: Polyester)	THM UR20 WS *1)	1	**1429420000**
Paper version for Laserprinter	ESO UR20 DIN A4 WS *2)	10	**1429430000**
Replacement parts			
Electronics module	UR20-4AO-UI-SP	1	**1347270000**
Basic module	UR20-BM-SP	5	**1350930000**
Plug-in connector unit	UR20-PK-4W-SP	5	**1346440000**
Note	*1) 1 roll = 1000 label = 1 Qty. *2) 1 sheet = 60 label = 1 Qty.		

Product standard	IEC 61131-2
EMC	EN 61000
ATEX	EN 60079
ATEXUL (in preparation)	UL 508

Let's connect.

Power-feed modules

10 A feeding; input or output current path; diagnosis visualisation

Weidmüller power-feed modules are available to refresh the power of the input and output current path. These feed 10 A, monitored by the voltage diagnosis display, in the corresponding input or output path. The time-saving commissioning is guaranteed by the standard u-remote plug with proven and tested “PUSH IN” technology for reliable contacting. The power supply is monitored by a diagnosis display.

Block diagram UR20-PF-I und UR20-PF-O

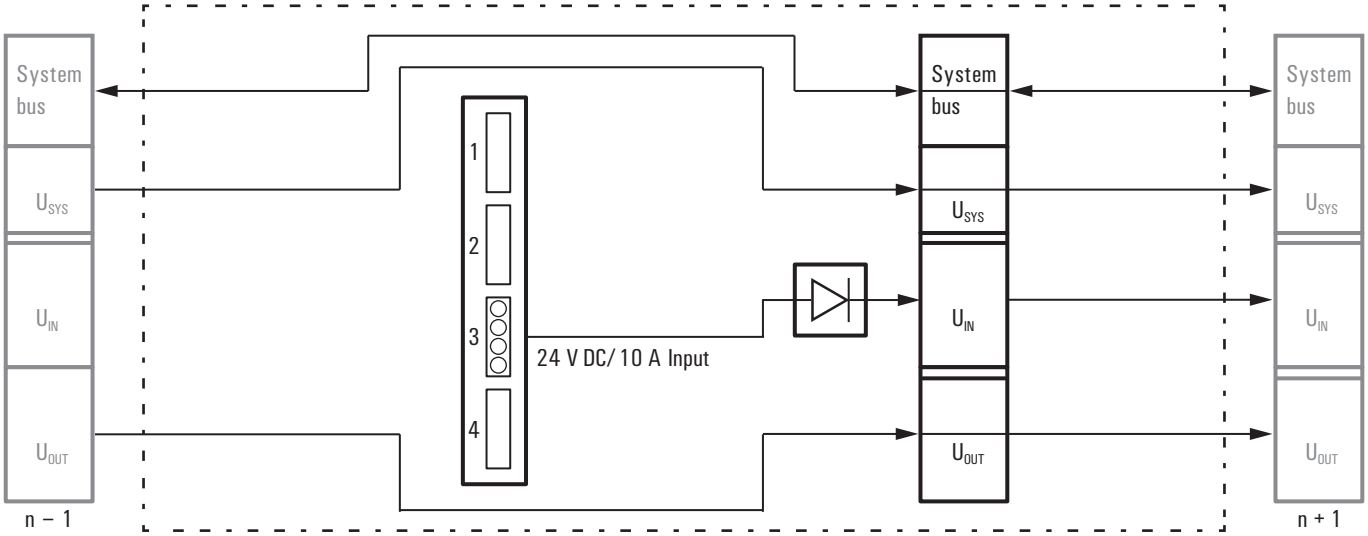

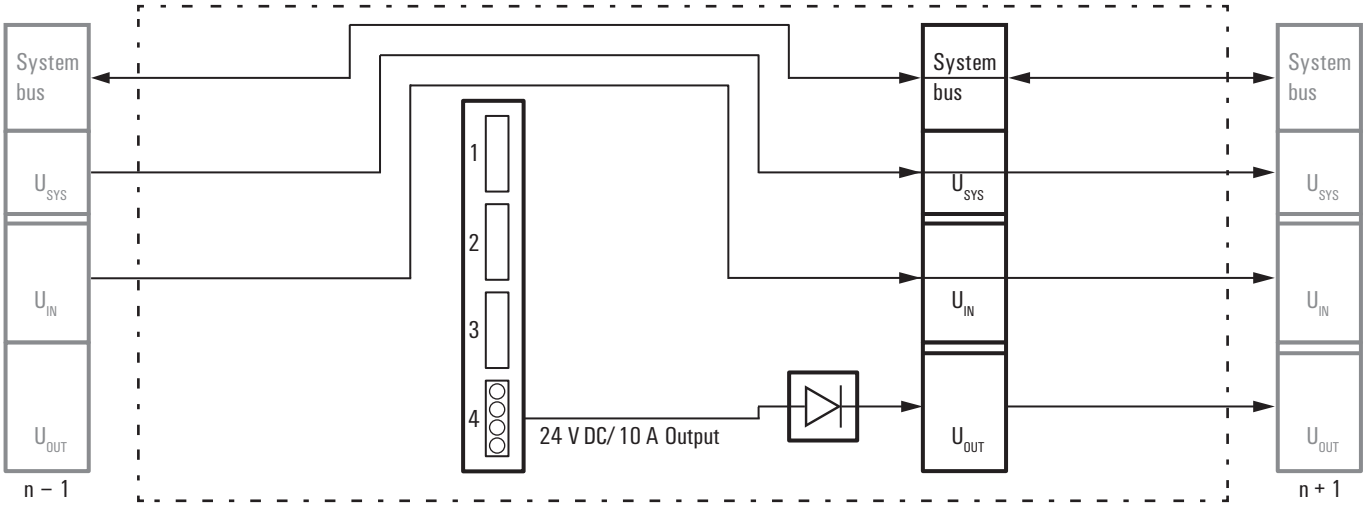

PF-I

- Power supply in input current path
- Power supply current 10 A
- Integrated diagnosis display

UR20-PF-I

Technical data

Supply	
Voltage supply for inputs	24 V DC +20 % / –15 %
Maximum feed current for input modules	10 A
Current consumption (I_{IN} in the respective power segment)	10 mA
General data	
Weight	76 g
Dimensions (H/W/D)	120 mm (with catch lever128 mm) x 11,5 mm x 76 mm

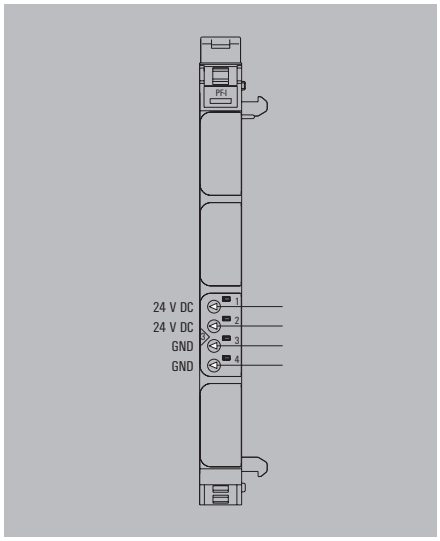

Ordering data

Module variants	Type	Qty.	Order No.
Power supply module	UR20-PF-I		1334710000

Accessories

	Type	Qty.	Order No.
Coding elements	KOSM BHZ5.00	100	1483050000
Termination kit	UR20-EBK-ACC	5	1346610000
Swivel marker	UR20-SM-ACC	20	1339920000
Connection marker for pusher custom printing	PM 2.7/2.6 MC SDR	192	1323700000
Connection marker for pusher neutral	PM 2.7/2.6 MC NE WS	960	1323710000
Module marker for custom printing	DEK 5/8-11.5 MC SDR	100	1341610000
Module marker for neutral	DEK 5/8-11.5 MC NE WS	500	1341630000
Thermotransfer version (Material: Polyester)	THM UR20 GE *1)	1	1429910000
Thermotransfer version (Material: Polyester)	THM UR20 WS *1)	1	1429420000
Paper version for Laserprinter	ESO UR20 DIN A4 WS *2)	10	1429430000
Replacement parts			
Electronics module	UR20-PF-I-SP	1	1347380000
Basic module	UR20-BM-PF-I-SP	5	1350940000
Plug-in connector unit	UR20-PK-PF-I-SP	5	1346460000
Note	*1) 1 roll = 1000 label = 1 Qty. *2) 1 sheet = 60 label = 1 Qty.		

Product standard	IEC 61131-2
EMC	EN 61000
ATEX	EN 60079
ATEXUL (in preparation)	UL 508

Let's connect.

PF

- Power supply in output current path
- Power supply current 10 A
- Integrated diagnosis display

UR20-PF-O

Technical data

Supply	
Voltage supply for outputs	24 V DC +20 % / –15 %
Maximum feed current for output modules	10 A
Current consumption (I_{OUT} in the respective power segment)	10 mA
General data	
Weight	76 g
Dimensions (H/W/D)	120 mm (with catch lever128 mm) x 11,5 mm x 76 mm

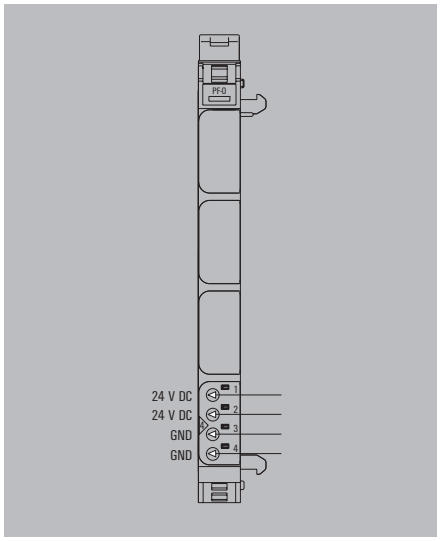

Ordering data

Module variants	Type	Qty.	Order No.
Power supply module	UR20-PF-O		1334740000

Accessories

	Type	Qty.	Order No.
Coding elements	KOSM BHZ5.00	100	1483050000
Termination kit	UR20-EBK-ACC	5	1346610000
Swivel marker	UR20-SM-ACC	20	1339920000
Connection marker for pusher custom printing	PM 2.7/2.6 MC SDR	192	1323700000
Connection marker for pusher neutral	PM 2.7/2.6 MC NE WS	960	1323710000
Module marker for custom printing	DEK 5/8-11.5 MC SDR	100	1341610000
Module marker for neutral	DEK 5/8-11.5 MC NE WS	500	1341630000
Thermotransfer version (Material: Polyester)	THM UR20 GE *1)	1	1429910000
Thermotransfer version (Material: Polyester)	THM UR20 WS *1)	1	1429420000
Paper version for Laserprinter	ESO UR20 DIN A4 WS *2)	10	1429430000
Replacement parts			
Electronics module	UR20-PF-O-SP	1	1347420000
Basic module	UR20-BM-PF-O-SP	5	1350950000
Plug-in connector unit	UR20-PK-PF-O-SP	5	1346480000
Note	*1) 1 roll = 1000 label = 1 Qty. *2) 1 sheet = 60 label = 1 Qty.		

Product standard	IEC 61131-2
EMC	EN 61000
ATEX	EN 60079
ATEXUL (in preparation)	UL 508

Let's connect.

Modules for functional safety

SIL 3; OSSD output; wire breakage and short-circuit detection

Safety technology is of central importance in the automation industry and machine construction. When attempting to reduce risks and avoid putting people and the environment in danger, you need solutions which satisfy stringent requirements and statutory specifications. The safety modules of the u-remote system have key features such as emergency stop circuits and wire breakage/ short-circuit detection. They satisfy all SIL 3 requirements according to IEC 62061 and EN ISO 13849-1, Category 4, PL e and support the safe operation of your system.

By safely shutting down the downstream output modules, the safety modules attain maximum safety with optimum control. All input sensors are independently supplied via separate voltage paths and report the current machine status to the control unit. The restart is either performed in manual mode or using the autostart function.
Safety modules from Weidmüller also cut maintenance and service times and improve your response times in an emergency – thanks to a concept of maximum transparency, e.g. using OSSD output.

The module electronics supply the connected actuators from the output current path (U_{OUT}).

UR20-PF-O-1DI-SIL block diagram by way of example

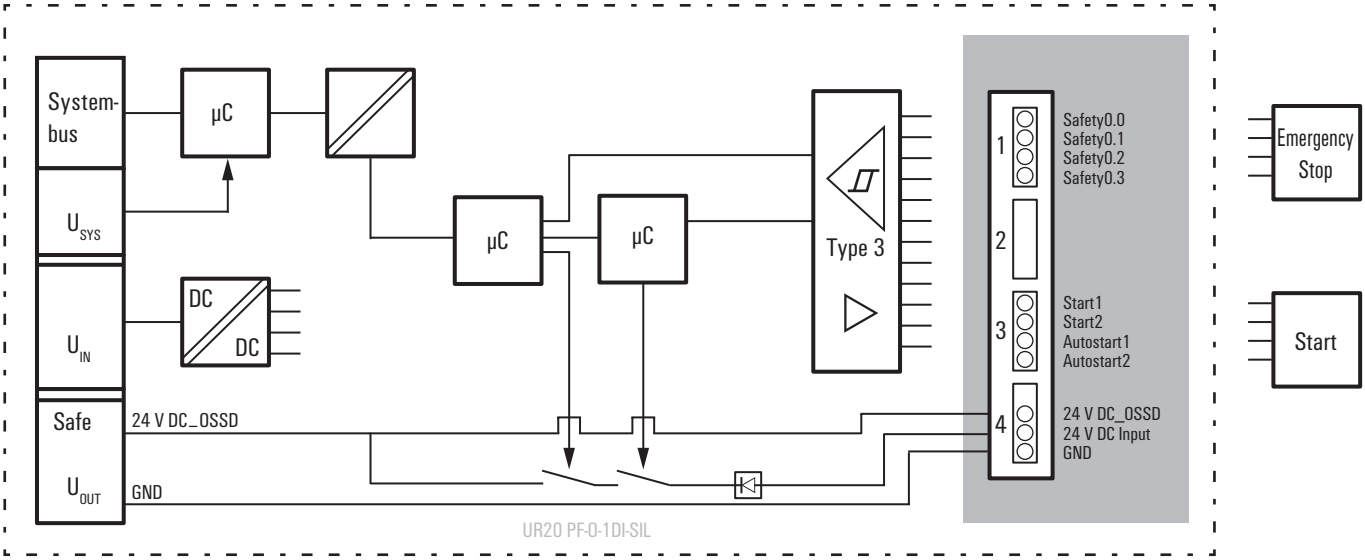

1 DI-SIL

- SIL 3 safety standard in accordance with IEC 62061 and DIN EN ISO 13849-1, category 4, PL e
- Connection for an emergency stop circuit
- OSSD output reports status to control unit
- Pulsed input circuit for wire breakage and short-circuit detection
- Restart: manual or using autostart

UR20-PF-O-1DI-SIL

Technical data

System data	
Interface	u-remote system bus
Transmission rate of system bus	48 Mbit/s
Safety-related data	
Achievable safety standard	IEC 61508 SIL 3 and DIN EN ISO 13849-1:2008 PL e
Level of diagnostic coverage	*)
MTTFD	*)
CCF	*)
Supply	
Supply voltage for system and inputs	24 V DC +20 % / –15 % via the system bus
Supply voltage for outputs	24 V DC +20 % / –15 %
Maximum feed current for input modules	8 A
Current consumption (internal)	< 45 mA
Digital inputs	
Wire breakage detection	yes
Short-circuit detection	yes
General data	
Weight	80 g
Dimensions (H/W/D)	120 mm (with catch lever128 mm) x 11,5 mm x 76 mm

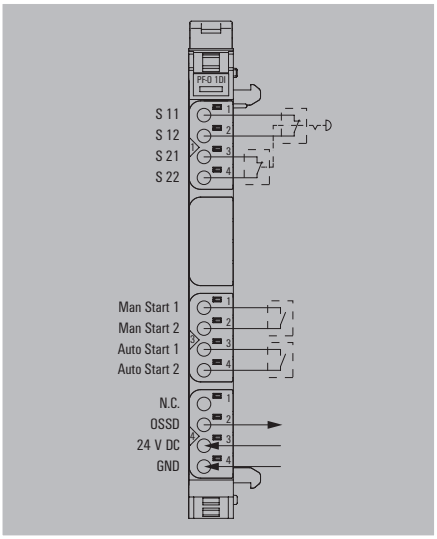

Ordering data

Module variants	Type	Qty.	Order No.
Safety module, 1 digital input	UR20-PF-O-1DI-SIL	1	1335030000

*) For this and additional technical data, please refer to the manual available at www.weidmueller.de or scan the QR code below.

Accessories

	Type	Qty.	Order No.
Coding elements	KOSM BHZ5.00	100	1483050000
Termination kit	UR20-EBK-ACC	5	1346610000
Swivel marker	UR20-SM-ACC	20	1339920000
Connection marker for pusher custom printing	PM 2.7/2.6 MC SDR	192	1323700000
Connection marker for pusher neutral	PM 2.7/2.6 MC NE WS	960	1323710000
Module marker for custom printing	DEK 5/8-11.5 MC SDR	100	1341610000
Module marker for neutral	DEK 5/8-11.5 MC NE WS	500	1341630000
Thermotransfer version (Material: Polyester)	THM UR20 GE *1)	1	1429910000
Thermotransfer version (Material: Polyester)	THM UR20 WS *1)	1	1429420000
Paper version for Laserprinter	ESO UR20 DIN A4 WS *2)	10	1429430000
Replacement parts			
Electronics module	UR20-PF-O-1DI-SIL-SP	1	1347520000
Basic module	UR20-BM-SIL-SP	5	1350970000
Plug-in connector unit	UR20-PK-SIL-1DI-SP	5	1346560000

Note

*1) 1 roll = 1000 label = 1 Qty.
*2) 1 sheet = 60 label = 1 Qty.

Product standard	IEC 61131-2
EMC	EN 61000
ATEX	EN 60079
ATEXUL (in preparation)	UL 508

Let's connect.

2 DI-SIL

- SIL 3 safety standard in accordance with IEC 62061 and DIN EN ISO 13849-1, category 4, PL e
- Connection for an emergency stop circuit
- OSSD output reports status to control unit
- Pulsed input circuit for wire breakage and short-circuit detection
- Restart: manual or using autostart

UR20-PF-O-2DI-SIL

Technical data

System data	
Interface	u-remote system bus
Transmission rate of system bus	48 Mbit/s
Safety-related data	
Achievable safety standard	IEC 61508 SIL 3 and DIN EN ISO 13849-1:2008 PL e
Level of diagnostic coverage	*)
MTTFD	*)
CCF	*)
Supply	
Supply voltage for system and inputs	24 V DC +20 % / –15 % via the system bus
Supply voltage for outputs	24 V DC +20 % / –15 %
Maximum feed current for input modules	8 A
Current consumption (internal)	< 45 mA
Digital inputs	
Wire breakage detection	yes
Short-circuit detection	yes
General data	
Weight	82 g
Dimensions (H/W/D)	120 mm (with catch lever128 mm) x 11,5 mm x 76 mm

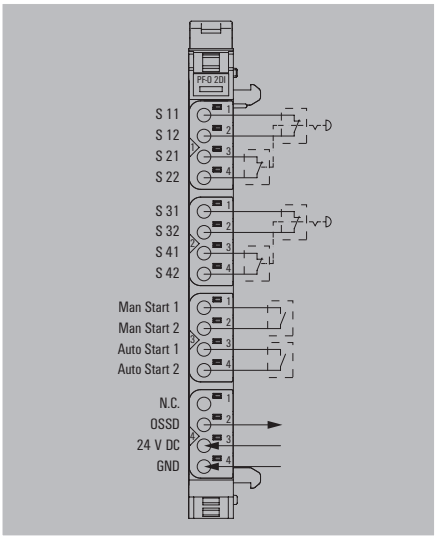

Ordering data

Module variants	Type	Qty.	Order No.
Safety module, 2 digital inputs	UR20-PF-O-2DI-SIL	1	1335050000

*) For this and additional technical data, please refer to the manual available at www.weidmueller.de or scan the QR code below.

Accessories

	Type	Qty.	Order No.
Coding elements	KOSM BHZ5.00	100	1483050000
Termination kit	UR20-EBK-ACC	5	1346610000
Swivel marker	UR20-SM-ACC	20	1339920000
Connection marker for pusher custom printing	PM 2.7/2.6 MC SDR	192	1323700000
Connection marker for pusher neutral	PM 2.7/2.6 MC NE WS	960	1323710000
Module marker for custom printing	DEK 5/8-11.5 MC SDR	100	1341610000
Module marker for neutral	DEK 5/8-11.5 MC NE WS	500	1341630000
Thermotransfer version (Material: Polyester)	THM UR20 GE *1)	1	1429910000
Thermotransfer version (Material: Polyester)	THM UR20 WS *1)	1	1429420000
Paper version for Laserprinter	ESO UR20 DIN A4 WS *2)	10	1429430000
Replacement parts			
Electronics module	UR20-PF-O-2DI-SIL-SP	1	1347540000
Basic module	UR20-BM-SIL-SP	5	1350970000
Plug-in connector unit	UR20-PK-SIL-2DI-SP	5	1346570000
Note	*1) 1 roll = 1000 label = 1 Qty. *2) 1 sheet = 60 label = 1 Qty.		

Product standard	IEC 61131-2
EMC	EN 61000
ATEX	EN 60079
ATEXUL (in preparation)	UL 508

Let's connect.

2 DI-Delay-SIL

- SIL 3 safety standard in accordance with IEC 62061 and DIN EN ISO 13849-1, category 4, PL e
- Switch-off after adjustable delay
- Connection for an emergency stop circuit
- OSSD output reports status to control unit
- Pulsed input circuit for wire breakage and short-circuit detection
- Restart: manual or using autostart

UR20-PF-O-2DI-DELAY-SIL

Technical data

System data	
Interface	u-remote system bus
Transmission rate of system bus	48 Mbit/s
Safety-related data	
Achievable safety standard	IEC 61508 SIL 3 and DIN EN ISO 13849-1:2008 PL e
Level of diagnostic coverage	*)
MTTFD	*)
CCF	*)
Supply	
Supply voltage for system and inputs	24 V DC +20 % / –15 % via the system bus
Supply voltage for outputs	24 V DC +20 % / –15 %
Maximum feed current for input modules	8 A
Current consumption (internal)	< 45 mA
Digital inputs	
Wire breakage detection	yes
Short-circuit detection	yes
General data	
Weight	84 g
Dimensions (H/W/D)	120 mm (with catch lever128 mm) x 11,5 mm x 76 mm

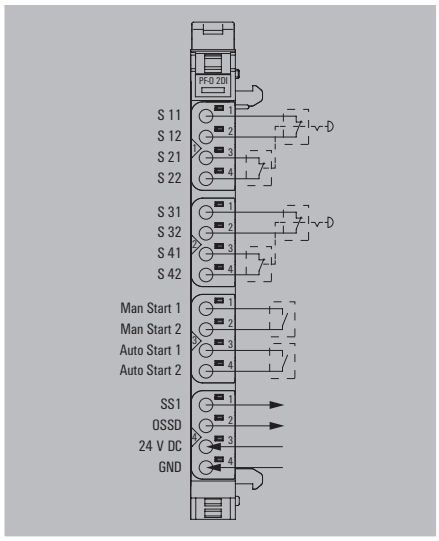

Ordering data

Module variants	Type	Qty.	Order No.
Safety module, 2 digital inputs, delayed	UR20-PF-O-2DI-DELAY-SIL	1	1335040000

*) For this and additional technical data, please refer to the manual available at www.weidmueller.de or scan the QR code below.

Accessories

	Type	Qty.	Order No.
Coding elements	KOSM BHZ5.00	100	1483050000
Termination kit	UR20-EBK-ACC	5	1346610000
Swivel marker	UR20-SM-ACC	20	1339920000
Connection marker for pusher custom printing	PM 2.7/2.6 MC SDR	192	1323700000
Connection marker for pusher neutral	PM 2.7/2.6 MC NE WS	960	1323710000
Module marker for custom printing	DEK 5/8-11.5 MC SDR	100	1341610000
Module marker for neutral	DEK 5/8-11.5 MC NE WS	500	1341630000
Thermotransfer version (Material: Polyester)	THM UR20 GE *1)	1	1429910000
Thermotransfer version (Material: Polyester)	THM UR20 WS *1)	1	1429420000
Paper version for Laserprinter	ESO UR20 DIN A4 WS *2)	10	1429430000
Replacement parts			
Electronics module	UR20-PF-O-2DI-DE-SIL-SP	1	1347530000
Basic module	UR20-BM-SIL-SP	5	1350970000
Plug-in connector unit	UR20-PK-SIL-2DI-SP	5	1346570000

Note

*1) 1 roll = 1000 label = 1 Qty.
*2) 1 sheet = 60 label = 1 Qty.

Product standard	IEC 61131-2
EMC	EN 61000
ATEX	EN 60079
ATEXUL (in preparation)	UL 508

Let's connect.

Accessories

Potential distribution modules; system accessories

A wide range of accessory modules is provided for the individual requirements of machine and plant construction. Various potential distribution modules are available for directly supplying sensors with 2-wire, 3-wire or 3-wire+FE connection technology from the remote-I/O system. These provide 16 "PUSH IN" potential points and supply your application with each auxiliary potential available. An empty module, where the system bus and voltage supply are looped through, allows you to plan expansion slots in a system and to start these up without any interruptions if required.

UR20-16AUX-O block diagram by way of example

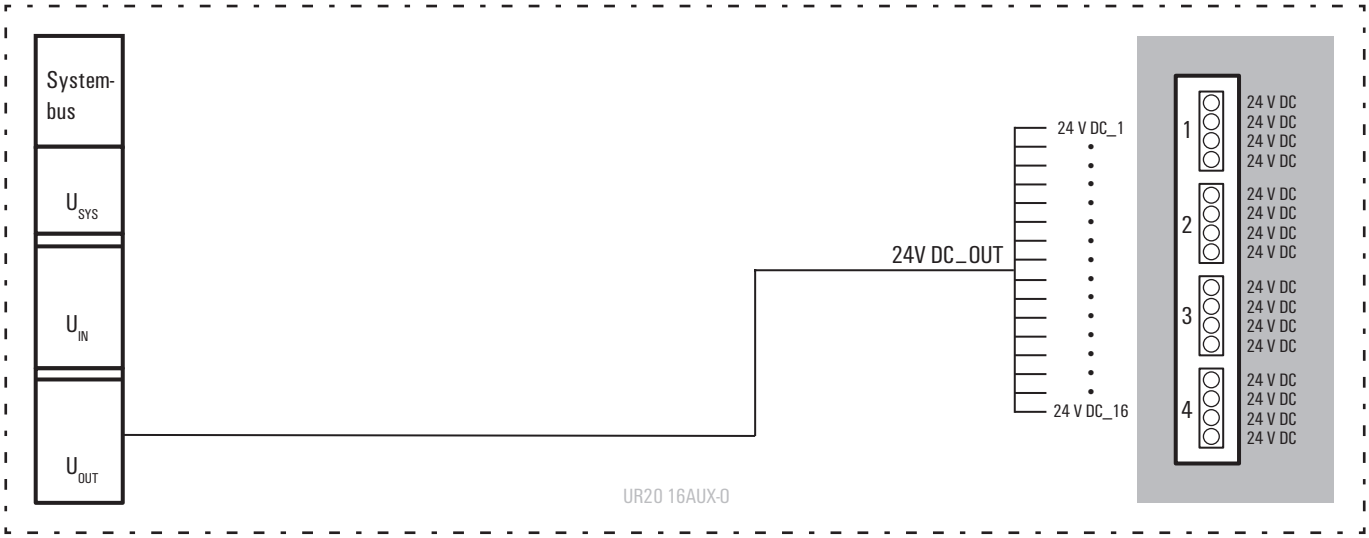

AUX

- Distribution of the various potentials
- Actuator and sensor supply
- 16 "PUSH IN" potential contacts

UR20-16AUX

Technical data

Supply	
Voltage supply	24 V DC +20 % / –15 % via Input- or output path / FE
General data	
Weight	84 g
Dimensions (H/W/D)	120 mm (with catch lever128 mm) x 11,5 mm x 76 mm

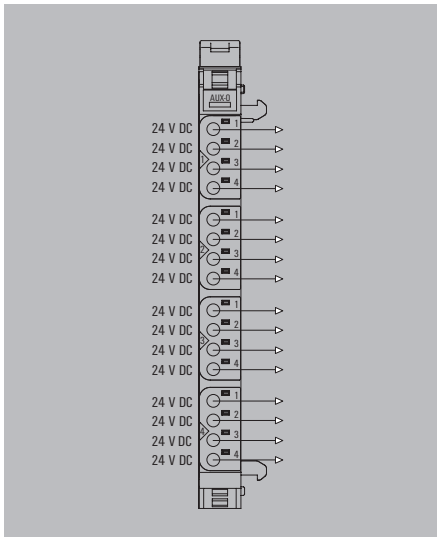

Ordering data

Module variants	Type	Qty.	Order No.
Potential distribution module	UR20-16AUX-I	1	1334770000
	UR20-16AUX-O	1	1334780000
	UR20-16AUX-FE	1	1334790000
	UR20-16AUX-GND-I	1	1334800000
	UR20-16AUX-GND-O	1	1334810000

Accessories

	Type	Qty.	Order No.
Coding elements	KOSM BHZ5.00	100	1483050000
Termination kit	UR20-EBK-ACC	5	1346610000
Swivel marker	UR20-SM-ACC	20	1339920000
Connection marker for pusher custom printing	PM 2.7/2.6 MC SDR	192	1323700000
Connection marker for pusher neutral	PM 2.7/2.6 MC NE WS	960	1323710000
Module marker for custom printing	DEK 5/8-11.5 MC SDR	100	1341610000
Module marker for neutral	DEK 5/8-11.5 MC NE WS	500	1341630000
Thermotransfer version (Material: Polyester)	THM UR20 GE *1)	1	1429910000
Thermotransfer version (Material: Polyester)	THM UR20 WS *1)	1	1429420000
Paper version for Laserprinter	ESO UR20 DIN A4 WS *2)	10	1429430000
Replacement parts			
Electronics module	UR20-16AUX-I-SP	1	1347450000
	UR20-16AUX-O-SP	1	1347470000
	UR20-16AUX-GND-FE-SP	1	1347480000
	UR20-16AUX-GND-I-SP	1	1347490000
	UR20-16AUX-GND-O-SP	1	1347500000
Basic module	UR20-BM-SP	5	1350930000
Plug-in connector unit	UR20-PK-PWR-I-SP	5	1346450000
	UR20-PK-PWR-O-SP	5	1346460000
	UR20-PK-FE-SP	5	1346490000
	UR20-PK-GND-I-SP	5	1346470000
	UR20-PK-GND-O-SP	5	1346480000

Note

*1) 1 roll = 1000 label = 1 Qty.
*2) 1 sheet = 60 label = 1 Qty.

Product standard	IEC 61131-2
EMC	EN 61000
ATEX	EN 60079
ATEXUL (in preparation)	UL 508

16AUX-I
Let's connect.

16AUX-O
Let's connect.

16AUX-FE
Let's connect.

16AUX-GND-I
Let's connect.

16AUX GND-O
Let's connect.

Empty module

- Forwarding of system bus and voltage paths
- Space for subsequent expansion
- Basis for all I/O-modules

UR20-ES

Technical data

General data	
Weight	70 g
Dimensions (H/W/D)	120 mm (with catch lever128 mm) x 11,5 mm x 76 mm

Ordering data

Module variants	Type	Qty.	Order No.
Empty module	UR20-ES	1	1315770000

Accessories

	Type	Qty.	Order No.
Coding elements	KOSM BHZ5.00	100	1483050000
Termination kit	UR20-EBK-ACC	5	1346610000
Swivel marker	UR20-SM-ACC	20	1339920000
Connection marker for pusher custom printing	PM 2.7/2.6 MC SDR	192	1323700000
Connection marker for pusher neutral	PM 2.7/2.6 MC NE WS	960	1323710000
Module marker for custom printing	DEK 5/8-11.5 MC SDR	100	1341610000
Module marker for neutral	DEK 5/8-11.5 MC NE WS	500	1341630000
Thermotransfer version (Material: Polyester)	THM UR20 GE *1)	1	1429910000
Thermotransfer version (Material: Polyester)	THM UR20 WS *1)	1	1429420000
Paper version for Laserprinter	ESO UR20 DIN A4 WS *2)	10	1429430000
Replacement parts			
Electronics module	UR20-ES-SP	1	1347370000
Basic module	UR20-BM-SP	5	1350930000
Plug-in connector unit	UR20-PK-ES-SP	5	1346510000
Note	*1) 1 roll = 1000 label = 1 Qty. *2) 1 sheet = 60 label = 1 Qty.		

Product standard	IEC 61131-2
EMC	EN 61000
ATEX	EN 60079
ATEXUL (in preparation)	UL 508

Let's connect.

Termination kit

- Includes an end plate and two end brackets

UR20-EBK

Ordering data

Module variants	Type	Qty.	Order No.
Termination kit	UR20-EBK-ACC	5	1346610000

Individual components

It goes without saying that Weidmüller also allows you to swap defective parts. The three-part modules can therefore be ordered as individual components.

Ordering data

Module variants	Type	Qty.	Order No.
Basic module	UR20-BM-SP	5	1350930000
Basic module	UR20-BM-PF-I-SP	5	1350940000
Basic module	UR20-BM-PF-O-SP	5	1350950000
Basic module	UR20-BM-SIL-SP	5	1350970000
Electronics module	UR20-4DI-P-SP	1	1346640000
Electronics module	UR20-8DI-P-SP	1	1346650000
Electronics module	UR20-8DI-P-3W-SP	1	1434220000
Electronics module	UR20-16DI-P-SP	1	1346680000
Electronics module	UR20-16DI-P-PLC-INT-SP	1	1346690000
Electronics module	UR20-2DI-P-TS	1	1463690000
Electronics module	UR20-4DI-P-TS	1	1463680000
Electronics module	UR20-4DO-P-SP	1	1346700000
Electronics module	UR20-4DO-P-2A-SP	1	1346710000
Electronics module	UR20-4DO-PN-2A-SP	1	1480950000
Electronics module	UR20-8DO-P-SP	1	1346720000
Electronics module	UR20-16DO-P-SP	1	1353730000
Electronics module	UR20-16DO-P-PLC-INT-SP	1	1346740000
Electronics module	UR20-4RO-SSR-255-SP	1	1347130000
Electronics module	UR20-4RO-CO-255-SP	1	1347120000
Electronics module	UR20-1CNT-100-1DO	1	1347140000
Electronics module	UR20-2CNT-100	1	1347150000
Electronics module	UR20-2PWM-05A-SP	1	1347180000
Electronics module	UR20-2PWM-2A-SP	1	1347190000
Electronics module	UR20-4AI-UI-16-SP	1	1347200000
Electronics module	UR20-4AI-UI-12-SP	1	1434230000
Electronics module	UR20-8AI-I-PLC-INT-SP	1	1347250000
Electronics module	UR20-4AI-TC-SP	1	1435740000
Electronics module	UR20-4AI-RTD-SP	1	1347290000
Electronics module	UR20-4AO-UI-SP	1	1347270000
Electronics module	UR20-PF-I-SP	1	1347380000
Electronics module	UR20-PF-O-SP	1	1347420000
Electronics module	UR20-PF-O-1DI-SIL-SP	1	1347520000
Electronics module	UR20-PF-O-2DI-DE-SIL-SP	1	1347530000
Electronics module	UR20-PF-O-2DI-SIL-SP	1	1347540000
Electronics module	UR20-16AUX-I-SP	1	1347450000
Electronics module	UR20-16AUX-O-SP	1	1347470000
Electronics module	UR20-16AUX-FE-SP	1	1347480000
Electronics module	UR20-16AUX-GND-I-SP	1	1347490000
Electronics module	UR20-16AUX-GND-O-SP	1	1347500000
Electronics module	UR20-ES-SP	1	1347370000
Plug-in connector unit	UR20-PK-1W-SP	5	1346400000
Plug-in connector unit	UR20-PK-2W-P-SP	5	1346430000
Plug-in connector unit	UR20-PK-3W-P-SP	5	1411430000
Plug-in connector unit	UR20-PK-4W-SP	5	1346440000
Plug-in connector unit	UR20-PK-255-SP	5	1346500000
Plug-in connector unit	UR20-PK-PWR-SP	5	1346450000
Plug-in connector unit	UR20-PK-PF-O-SP	5	1346480000
Plug-in connector unit	UR20-PK-PF-I-SP	5	1346460000
Plug-in connector unit	UR20-PK-1CNT-1DO-SP	5	1346520000
Plug-in connector unit	UR20-PK-2CNT-SP	5	1346550000
Plug-in connector unit	UR20-PK-GND-I-SP	5	1346470000
Plug-in connector unit	UR20-PK-GND-O-SP	5	1346480000
Plug-in connector unit	UR20-PK-FE-SP	5	1346490000
Plug-in connector unit	UR20-PK-ES-SP	5	1346510000
Plug-in connector unit	UR20-PK-PWM-SP	5	1346550000
Plug-in connector unit	UR20-PK-SIL-1DI-SP	5	1346560000
Plug-in connector unit	UR20-PK-SIL-2DI-SP	5	1346570000
Plug-in connector unit	UR20-PK-FBC-SP	5	1346580000
Plug-in connector unit	UR20-PK-PLC-SP	5	1346590000

System overview

Below you will find assistance for putting together your system. Please note the maximum number of 64 active modules and the packaging units for the accessories! More detailed technical data and product descriptions can be found here in the catalogue in the corresponding chapter.

Bottom right on this page you will find assistance for supplying the current paths.

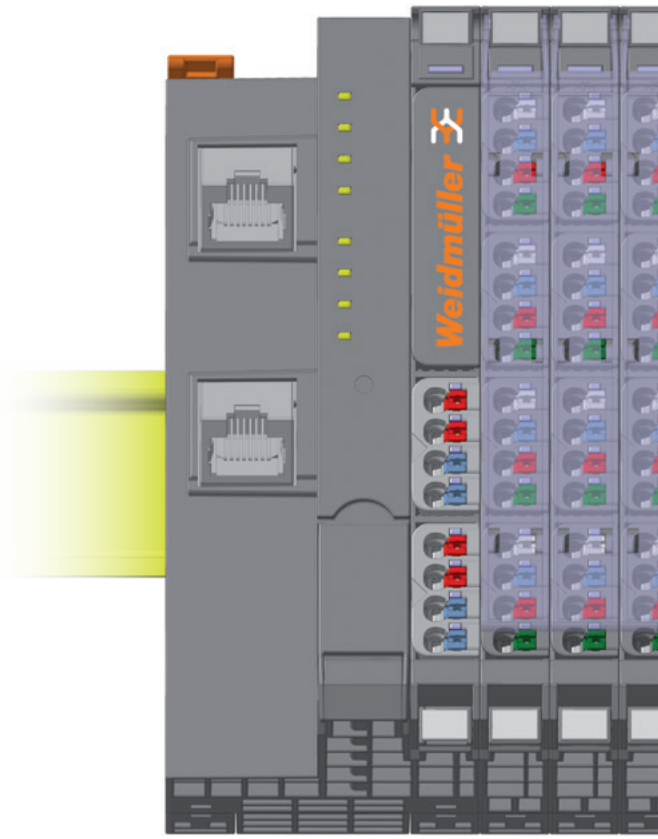

1. What field bus are you using?

Bus	Type	Order No.	Page
PROFIBUS	UR20-FBC-PB-DP	1334870000	A.9
PROFINET	UR20-FBC-PN-IRT	1334880000	A.11
EtherCAT	UR20-FBC-EC	1334910000	A.13
Modbus	UR20-FBC-MOD	1334930000	A.15

2. What signals do you want to process?

Digital inputs	Order No.	Page
UR20-4DI-P	1315170000	A.17
UR20-8DI-P-2W	1315180000	A.18
UR20-8DI-P-3W	1394400000	A.19
UR20-16DI-P	1315200000	A.20
UR20-16DI-P-PLC-INT	1315210000	A.21
UR20-2DI-P-TS	1460140000	A.22
UR20-4DI-P-TS	1460150000	A.23
UR20-1CNT-100-1DO	1315570000	A.35
UR20-2CNT-100	1315590000	A.36
Digital outputs		**Page**
UR20-4DO-P	1315220000	A.25
UR20-4DO-2A	1315230000	A.26
UR20-4DO-PN-2A	1394420000	A.27
UR20-8DO-P	1315240000	A.28
UR20-16DO-P	1315250000	A.29
UR20-16DO-P-PLC-INT	1315270000	A.30
UR20-4RO-SSR-255	1315540000	A.31
UR20-4RO-CO-255	1315550000	A.32
UR20-PWM-0.5A	1315600000	A.39
UR20-2PWM-2A	1315610000	A.40
Analogue inputs		**Page**
UR20-4AI-UI-16	1315620000	A.43
UR20-4AI-UI-12	1394390000	A.44
UR20-8AI-I-PLC-INT	1315670000	A.45
UR20-4AI-RTD-DIAG	1315700000	A.48
UR20-4AI-TC-DIAG	1315710000	A.47
Analogue outputs		**Page**
UR20-4AO-UI	1315680000	A.51
Further functional modules		**Page**
UR20-PF-O-1DI-SIL	1335030000	A.57
UR20-PF-O-2DI-SIL	1335050000	A.58
UR20-PF-O-2DI-DELAY-SIL	1335040000	A.59

3. Do you need more than 10 A on the input or output path? Then you will need an additional supply! There is a sample calculation at the bottom of this page.

	Order No.	Page
UR20-PF-I	1334710000	A.53
UR20-PF-O	1334740000	A.54

4. AUX and accessories

AUX	Order No.	Page
UR20-16AUX-I	1334770000	A.61
UR20-16AUX-O	1334780000	A.61
UR20-16AUX-FE	1334790000	A.61
UR20-16AUX-GND-I	1334800000	A.61
UR20-16AUX-GND-O	1334810000	A.61
Accessories		**Page**
End bracket	1346610000	A.61
Swivel marker	1339920000	A.61
Connection marker for pusher custom printing	1323700000	A.61
Connection marker for pusher neutral	1323710000	A.61
Module marker for custom printing	1341610000	A.61
Module marker for neutral	1341630000	A.61
Empty module	1315770000	A.62
Thermotransfer version (Material: Polyester)	1429910000	A.61
Thermotransfer version (Material: Polyester)	1429420000	A.61
Paper version for Laserprinter	1429430000	A.61

The additional supply calculation is different for each application. Simultaneity factors and current requirement must be known. To assist you, we have produced the example shown here in a simplified form.

Our example uses a row of 8-DO modules, i.e. units which can hold four actuator connections each. The actual current needed and therefore the position for a power-feed module to supply the current path can be determined from the mathematical combination of current requirement and simultaneity factor. Please note that u-remote provides an input and an output current path. Both must be included in the additional supply calculation. The system voltage doesn't have to be taken into account.

Sample calculation

Module no.	Module type	Current requirement of connected devices (A)	Simultaneity factor	Current following calculation of simultaneity factor per module	Current requirement of system – cumulative	Current requirement of system – cumulative with UR20-PF-O
1st module	UR20-8DO-P	0.5	0.5	0.25	0.25	0.25
2nd module	UR20-8DO-P	0.3	0.5	0.15	0.4	0.4
3rd module	UR20-8DO-P	2.0	0.7	1.4	1.8	1.8
4th module	UR20-8DO-P	2.0	0.5	1	2.8	2.8
5th module	UR20-8DO-P	2.0	0.3	2	4.8	4.8
6th module	UR20-8DO-P	0.5	0.2	0.1	4.9	4.9
7th module	UR20-8DO-P	1.0	0.1	0.75	5.65	5.65
8th module	UR20-8DO-P	1.0	0.2	0.2	5.85	5.85
9th module	UR20-8DO-P	1.2	0.5	0.6	6.45	6.45
10th module	UR20-8DO-P	2.0	1.0	2	8.45	8.45
	UR20-PF-O					
11th module	UR20-8DO-P	2.0	1.0	2	10.45	2
12th module	UR20-8DO-P	3.0	1.0	1	11.45	3
13th module	UR20-8DO-P	2.0	1.0	2	13.45	5

Current requirement exceeds 10 A!
The output current path therefore needs an additional supply before the 11th module.

10 A supplied by the UR20-PF-O module.
The 1.55 A calculated as remaining after the 10th module must not be added to the 10 A after the UR20-PF-O module!

AUTOMATISME | CONTROL ELÈCTRIC
C/ Samontà, 22
Pol. Ind. Fontsanta
08970 Sant Joan Despí
BARCELONA
T. +34 93 477 62 62
www.acesa.es